DigiCart® II Plus

Owner's Manual

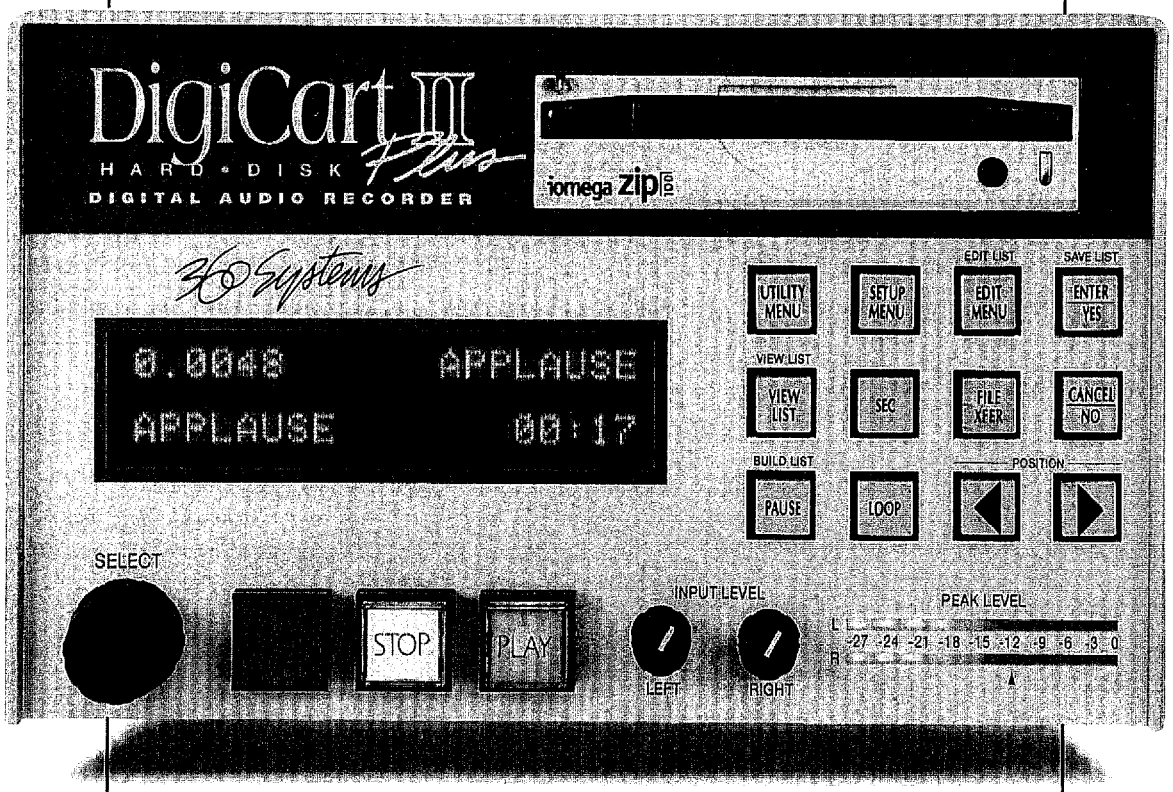

360 Systems®

DigiCart II Plus

DIGITAL AUDIO HARD DISK RECORDER

SOFTWARE VERSION 2.51

OWNER'S MANUAL

FIRST EDITION

JULY 1997

360 Systems®

PROFESSIONAL DIGITAL AUDIO

SERIAL NUMBER: _____

WARNING

This equipment complies with Part 15 of the FCC Rules. These limits are designed to provide reasonable protection against harmful interference when the equipment is operated in a commercial environment. This equipment generates, uses and can radiate radio frequency energy and if not installed and used in accordance with the owners manual, may cause interference to radio communications. Operation of this equipment in a residential area is likely to cause interference in which case the user will be required to correct the interference at his own expense.

This device will accept any interference received, including interference that may cause undesired operation.

The user is cautioned that changes made to the equipment without the approval of the manufacturer could void the user's authority to operate this equipment.

It is suggested that only shielded and grounded cables be used to ensure compliance with FCC Rules.

NOTICE

This Class A digital apparatus meets all requirement of the Canadian Interference-Causing Equipment Regulations.

Cet appariel numerique de la classe A respecte toute las exigence du Reglement sur le materiel brouilleur du Canada.

Printing history:

Software revision 2.51

June 1997

THE FOLLOWING WARNING SYMBOLS ARE USED IN THIS MANUAL

ATTENTION:	Refer to Owner's Manual for important information.
ATTENTION:	Venuillez vous référer au mode d'emploi pour une information importante.
ATTENZIONE:	Fate riferimento al manuale per informazioni importanti.
ATENTCION:	Favor de referir al manual de operacion por informacion importante.

WARNING:	Electrical shock hazard.
AVERTISSEMENT:	Danger de choc électrique.
AVVERTIMENTO:	Pericolo di shock elettrico.
ADVERTENSIA:	Peligro de choque electrico.

LIMITED WARRANTY

The 360 Systems DigiCart/II Plus is warranted against defects in material and workmanship for a period of one year from date of original purchase. This warranty includes parts and labor.

This warranty excludes units that have been modified, repaired by unauthorized personnel, or damaged by abuse, improper operation, dirt, or static electricity.

360 Systems assumes no liability whatsoever for real or consequential damages, loss of profits, inconvenience or any other losses due to non-operation of the DigiCart/II Plus.

To reduce the risk the risk of electric shock,
do not expose this unit to rain or moisture.

Do not remove the cover.

No user serviceable parts inside.

Refer servicing to qualified service personnel.

PRODUCT IMPROVEMENTS AND UPGRADES

360 Systems reserves the right to make changes and/or improvements to its products, without incurring any obligation to incorporate such changes or improvements in units previously sold or shipped.

360 Systems may issue Technical Support Bulletins from time to time, advising owners of record of product enhancements that become available. Technical Support Bulletins may also be requested through 360 Systems Customer Service department by telephone at (818) 991-0360 or Facsimile at (818) 991-1360.

TRADEMARKS AND PATENTS

360 Systems and DigiCart are registered trademarks of 360 Systems. QuickStack is a trademark of 360 Systems. Zip™ is a registered trademark of Iomega Corporation. "Dolby" is a trademark of Dolby Laboratories Licensing Corporation.

Software contained in this product is copyrighted by 360 Systems, Microware Systems Corp., Iomega Corporation and Dolby Laboratories, Inc.

Designs incorporated in this product are the subject of current or pending USA and foreign patents.

360 Systems' sole liability under this limited warranty shall be the repair or replacement of defective product or components. Products being returned under warranty shall be sent to 360 Systems or one of its foreign service centers, freight prepaid in the original or equivalent packaging.

SHIPPING ADDRESS

Freight and mail may be sent to 360 Systems at the following address:

360 Systems
5321 Sterling Center Drive
Westlake Village
California 91361-4613 USA

Please call 360 Systems for a return authorization number before returning any merchandise for any reason whatsoever.

The primary telephone number is (818) 991-0360. The switchboard is open Monday through Friday, from 8:00 AM to 5:00 PM, California time.

Faxes may be sent to (818) 991-1360, 24 hours.

You also may reach 360 Systems electronically:

WEB: http://www.360Systems.com

EMAIL: info@360.com

DigiCart II Plus

INTRODUCTION

Congratulations! You have chosen DigiCart/II Plus, the most advanced hard disk/cart system in the broadcast industry. Building on technology proven in the industry standard DigiCart/II, your new DigiCart/II Plus delivers many significant enhancements. A few of these enhancements include the use of low cost removable Iomega Zip™ disks, larger hard disks with the option of installing a second internal unit and the inclusion of the D-NET file transfer network as standard.

Cuts are stored on internal fixed hard disks (HDs) or removable Zip™ disks. Each DigiCart/II Plus contains one internal HD, one Zip drive and the provision for mounting a second internal HD. Multiple HDs may be used with DigiCart/II Plus's companion Hard Disk System (HDS) which provides mounting, power supply and data interconnections for up to five additional drives in a half-rack enclosure.

Transportable recordings for archiving and backup are stored on Iomega Zip Disks. These economical, re-recordable compact magnetic disks are DigiCart/II Plus's "carts". Iomega, the company that built the reliable Bernoulli™ Drive used in the legendary DigiCart/II, has engineered the Zip drive system to provide the speed, ease of use and reliability required in professional audio. Each Zip Disk can store 100MB of data - enough to record 8¾ minutes of 16-bit linear stereo at 48K, and 9½ minutes at 44.1K.

A notable feature of DigiCart/II Plus is selectable recording formats. You may choose linear sampling rates of 48, 44.1 or 32 kilosamples/second in mono or stereo. All formats can coexist, for the machine is smart and plays them back automatically. Dolby AC2 stereo data compression is selectable at the 48K rate. AC2 delivers more than five times as much stereo storage time with subjectively excellent sound quality. Accurate compression and expansion of the digital information accomplish this. AC2 does not use "psycho-acoustic tricks" that discard parts of the sound that might not be noticed.

DigiCart/II Plus's storage space is variable. By matching bandwidth and track needs to the material (or limits of the downstream audio chain) you may maximize storage. These flexible rates provide advantages for the broadest range of applications. For most applications, Dolby AC2 delivers the greatest broadband storage without regard to content. AC2 uses less disk space than even 32k mono recording while delivering full bandwidth stereo.

Because DigiCart/II Plus is a software based device, supplementary information can be stored along with each individual audio recording. This information is stored in a *header* containing:

- Five character ID for Drive, Directory and Cut.
- A name of up to fifteen alphanumeric characters
- Total running time
- Sampling rate
- Recording format
- Editing information for head and tail times, fade in, fade out, gain and secondary Cue timing.

Much of this information is displayed on the front panel of your DigiCart/II Plus to assist you in managing a large audio library.

A significant advantage of DigiCart/II Plus is random access to any Cut. Multiple Drives, Directories and Cuts are quickly accessed. Once the ID of a Cut appears in DigiCart/II Plus's display, that Cut is *pre-loaded* and available for instant playback. This way, multiple sequential Cuts can be rapidly accessed from a single DigiCart/II Plus machine. Unlimited Cuts may be stacked in easily edited pre-built lists. The *QuickStack* feature lets you create a sequence "on the fly" for one-time-only use, or it may be saved and named for repeated use.

DigiCart/II Plus also expands the traditional role of the cart machine by including non-destructive editing capabilities. You edit and prepare Cuts on the same medium used for playback. Start and end points are easily adjusted. Up to 40 seconds of fade-in and fade-out can be applied. Playback gain can be set for each individual recording and sounds may be seamlessly looped for continuous play.

Maintenance issues have been addressed with modular construction, making repairs an easy matter for the electronics professional. Durable construction keeps wear and tear to a minimum, even in high-usage environments. The design of DigiCart/II Plus incorporates built-in upgrade paths and the capability to accept larger disk drives as storage technology advances.

DigiCart/II Plus has been significantly enhanced by the inclusion of D-NET file transfer software as standard. D-NET enables the digital audio interfaces of your DigiCart/II Plus to be used for faster than real time transfers of individual Cuts, entire Drives and their associated file information.

Before you begin using your DigiCart/II Plus, please take the time to read this manual. You'll find information regarding *Startup* and a *Condensed Operating Guide* with concise step-by-step instructions in Chapter 1. Chapter 2 covers *Setup*. Detailed *Operating Instructions* are in Chapter 3. *Stacks* (Playlists) are explained in Chapter 4. *Maintenance* information is contained in Chapter 5. Operation of D-NET is detailed in Chapter 6.

For product support and assistance, you may reach *360 Systems* Customer Service by:

Phone: 818-991-0360 (9:00 AM to 5:00 PM Pacific time)

Fax: 818-597-2314

EMAIL: d360tek@aol.com

TABLE OF CONTENTS

CHAPTER ONE – GETTING STARTED

CHAPTER FOUR- STACK MODE

Chapter One

GETTING STARTED

Your new DigiCart/II Plus stores digital audio on removable Zip disks and both internal or external fixed hard disks. These are collectively referred to as Drives. Each individual Drive (or Disk) contains ten Directories numbered 0 to 9. Each of these Directories can contain index numbers from 000 to 999 that identify the audio files, called Cuts.

Cuts can be played individually or they may be assembled into playlists called Stacks. Each Drive (or Disk) has a Stack Directory. The Stack Directory can contain index numbers from 000 to 999.

THE ID SYSTEM

It may seem overwhelming to consider that a DigiCart/II Plus may contain thousands of individual Cuts and Stacks containing any combination of Cuts or other Stacks, all of which are instantly accessible upon your simple command. Yet the ID and NAME system of DigiCart/II Plus simplifies and clarifies the location and identity of every Cut and Stack.

DigiCart/II Plus provides a straightforward identification and naming approach suitable for the most advanced external controls. These range from QWERTY keyboards and DigiCart/II's RC-210 and RC-220 remote controls, to Serial-Interfaced PCs and industry standard ES-Bus automation and editing controllers.

The key to this ID system is an easily understood five-character basic identifier. The first character represents the Drive. There are seven choices:

0	=	Internal Zip Disk
1	=	Internal Hard Disk
2	=	Optional Second Internal Hard Disk or External Hard Disk
3-5	=	External Hard Disks
6	=	External Zip Drive

After a "." the second character represents the Directory. The ten Cut Directories range from 0 - 9. A unique eleventh character, "S" is used to identify a Drive or Stack Directory.

Individual Cuts and the next three digits mark Stacks: **000-999** so there can be 1000 Cuts in each of the 10 regular Directories. An extra character follows stack numbers: **L** for Linear Stacks, **R** for Rotating stacks. For example:

Cut 27 in Directory 8 on Hard Disk 2 would have the ID: **2.8027**

Rotating Stack 5 on the Zip Drive would be identified as: **0.S005R**

NOTE: The first number in this system is **0**, not **1**.

Every Drive, Directory, Cut and Stack can be given a 15-character NAME, so you do not have to constantly crosscheck between a printed index and the screen display. DigiCart/II Plus will sort contents numerically by ID, or alphabetically by NAME.

DRIVES

Your DigiCart/II Plus records digital audio directly to fixed hard disks or removable Zip disks. Recordings with different formats may be stored on the same Drive. DigiCart/II Plus reads a "header" stored with each recording to properly configure itself for playback.

A single DigiCart/II Plus will manage up to seven Drives and instantly play consecutive audio files from all of them. The Drives are linked via the SCSI bus (Small Computer System Interface). This standardized interconnect allows for expansion and flexibility as storage technology evolves. The SCSI ID number is the same as Drive ID of the DigiCart/II Plus. Chapter Five - MAINTENANCE GUIDE contains information about Drive installation.

ZIP REMOVABLE MEDIA

360 Systems selected the Zip Disk, from Iomega Corporation, as the removable media for your DigiCart/II Plus because it provides the reliability, speed and ease of use required in professional audio.

THE INTERNAL HARD DISK

A standard DigiCart/II Plus contains one HD-1000, 1 Gbyte Hard Disk.

EXTERNAL DISK DRIVES (EXT 2 - EXT 5)

The Model HDS-01 enclosure provides additional mounting, power and cooling for up to five external Drives. The Drives may vary in size and can be added as needed to provide additional storage time.

EXTERNAL ZIP DRIVE (EXT 6)

DigiCart/II Plus supports the use of an external Zip Drive via the SCSI port on the back of unit. We recommend the Model D-Zip-DRV-E, available from 360 Systems. NOTE: EXT 6 can also be used to interface to an external hard disk in an HDS enclosure.

SCSI INTERFACE

WARNING: THE SCSI CONNECTOR ON YOUR DIGICART/II PLUS IS A CENTRONICS® 50 PIN CONNECTOR AND MAY HAVE TO BE ADAPTED TO INTERFACE WITH THE 25 PIN "D" CONNECTOR USED ON SOME SCSI DEVICES. (SEE BELOW) DO NOT CONNECT A SCSI DEVICE TO THE DIGICART/II PLUS 25 PIN "D" REMOTE CONTROL CONNECTOR.

ALTHOUGH THE REMOTE CONTROL CONNECTOR ON YOUR DIGICART II/PLUS WILL MATE TO SOME SCSI CABLES, THIS IS NOT A SCSI INTERFACE! CONNECTING A SCSI DEVICE TO THE REMOTE CONTROL CONNECTOR WILL SEVERELY DAMAGE THE SCSI DEVICE.

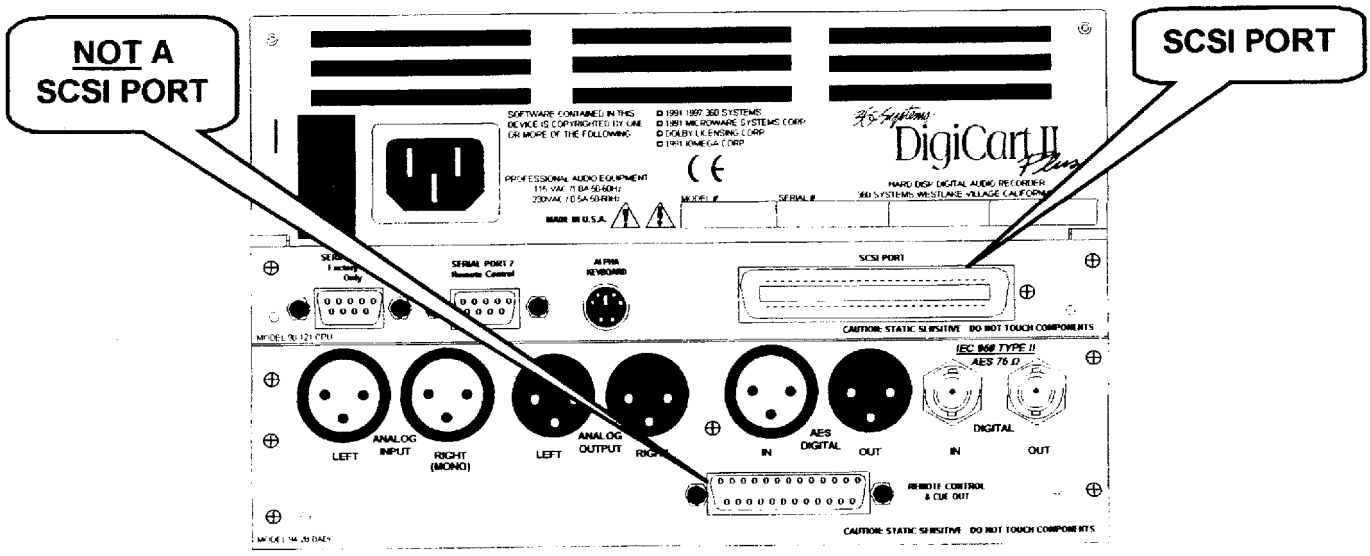

DRIVE STORAGE TIMES

Storage time on DigiCart/II Plus Drives will vary depending upon the sampling rate and recording format used. The table below shows approximate recording times, based on stereo recording at different sampling rates. Storage capacity will double in monaural for linear recordings. Dolby AC- 2 operates only in stereo, however mono material may be stored on either or both tracks.

DRIVE STORAGE TIMES (STEREO)

	20 kHz/48K DOLBY AC2	20 kHz/48K LINEAR	20 kHz/44.1K LINEAR	15 kHz/32K LINEAR
HD-1000	590 min	110 min	120 min	165 min
HD-2000	970 min	180 min	195 min	270 min
HD-3000	1485 min	275 min	300 min	415 min
Zip 100 MByte	46 min, 20 sec	8 min, 40 sec	9 min, 25 sec	13 min

Times quoted are approximate. Storage times may vary with actual use, depending on the combinations of bandwidths, formats and sample rates stored on a drive and the length and number of Cuts and Stacks.

DIRECTORIES

DigiCart/II Plus provides Directories to organize and group audio Cuts that have something in common; e.g.: spots, jingles, station IDs, production music beds, common types of sound effects etc.

Each Drive may contain up to 10 Directories identified as 0-9. The Directory character appears second in the ID, following a " . " used by DigiCart/II Plus to separate the Drive ID from that of the Directory.

An additional Directory, S, is used to store information about Stacks. There are two types of Stack: Linear and Rotating. Once started, a Linear Stack will continue with Follow-On play until all of its contents have been played, or the user presses STOP. A Rotating Stack will stop after each Cut and wait for a PLAY command to continue. Stacks may be contained within Stacks, allowing for versatile "like live" performance from an automated system.

For example, by recording several different leads and tags to a recurring song or break, the rotation lets you automatically vary the front- or back-announcement. When programmed as a Linear Stack with a rotating lead or tag, the item will have a different nature with each occurrence.

CUTS

Cuts are individual recordings. Each has a "header" which stores its ID and NAME plus information about total playing time, SAMPLING RATE and RECORDING FORMAT. This information is shown on DigiCart/II's front panel display each time a Cut is selected for playback.

Other information contained in the header is not shown on the display unless called up by EDIT MENU activities. It is used for file management functions performed in the background by DigiCart/II's operating system. This includes HEAD and TAIL markers, FADE IN and FADE OUT markers, OUTPUT GAIN settings and other information.

The number of Cuts that may be recorded really is limited only by the maximum amount of recording time available on a Drive. Each Drive may contain 10 Directories, each containing 1000 Cuts. DigiCart/II Plus can store audio information in a non-contiguous manner, so Cuts may be recorded, erased and re-recorded in any length without concern about disk segmentation. In other words, the total of all empty disk space will always be available for recording new Cuts.

Cuts may be edited using DigiCart/II's non-destructive editing features. You can also place Secondary cue markers in Cuts, and copy Cuts to other Drives and Directories or other index numbers in the same Directory. All Cuts may be played back-to-back, even if they reside in different Drives or Directories.

NAVIGATION

The selection of Drive, Directory or Cut is organized into "layers." Navigation between the Drive, Directory and Cut layers is accomplished by pressing DigiCart/II's Left and Right POSITION Buttons. Within any layer, rotating the SELECT knob accesses available Drives, Directories, Cuts or Stacks.

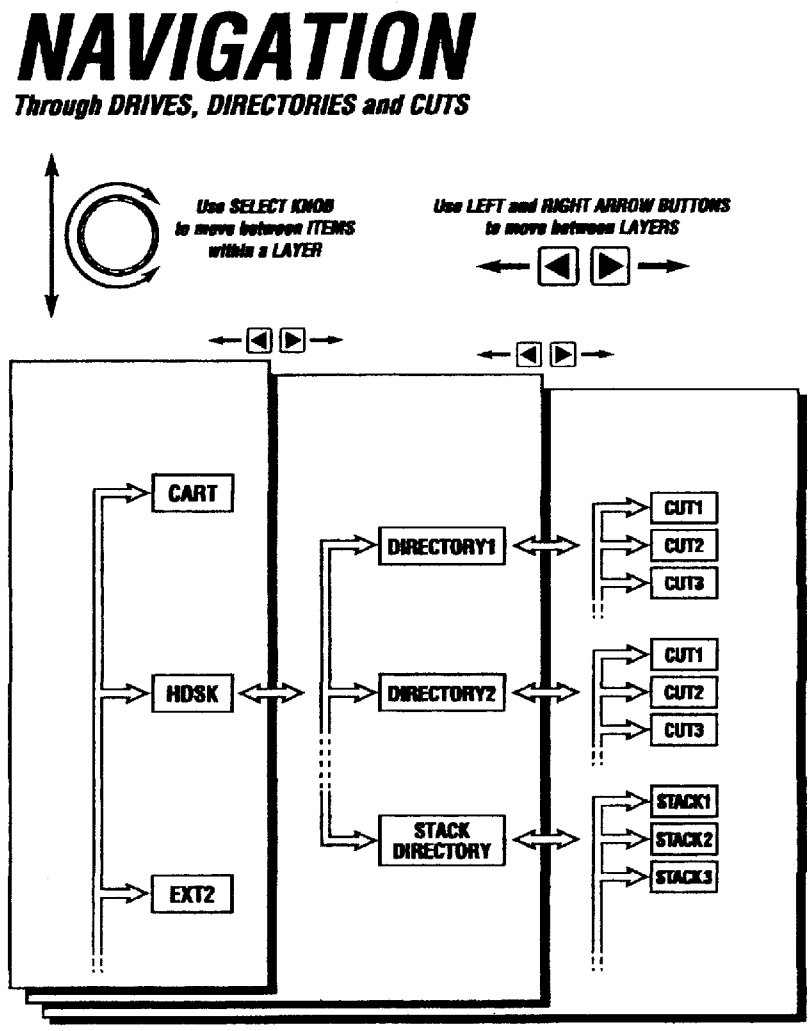

CONDENSED OPERATING GUIDE

This section presents condensed information on the operation of your DigiCart/II Plus. Fully detailed step-by-step instructions are found in Chapter Three: OPERATING INSTRUCTIONS.

NAVIGATION

SELECTING A DRIVE

Press the Left POSITION Button twice.
Rotate the SELECT Control to choose a Drive number.

SELECTING A DIRECTORY

Press the Right POSITION Button from Drive Layer.
Press the Left POSITION Button from the Cut Layer.
Rotate the SELECT Control choose a Directory ID.

SELECTING A CUT

Press the Right POSITION Button twice.
Rotate the SELECT Control to choose an ID/Name.

RECORDING AND PLAYING CUTS

CHECKING AVAILABLE DISK SPACE

Press and hold the STOP button.

SETTING RECORD LEVELS

Using tone, press REC. Adjust INPUT LEVEL for **-9** segments "just off". Illumination of the red **"0"** segments indicates probable distortion.

RECORDING

Press the REC Button. Press the PLAY Button to start recording.
Press the PAUSE Button to interrupt recording,
Press the PAUSE Button again to continue.
Press and hold the SEC Button to insert the Secondary Cue.
Press the STOP Button to end Recording.

MAKING A DIGITAL RECORDING

Select the digital input you would like to record.
If desired, select Dolby AC-2 data compression for 48K digital inputs. If you do no wish to compress a 48K digital input, select any format other than AC-2. (44.1K and 32K digital input signals are never compressed.)
Select a record trigger threshold.
Select the appropriate digital audio input type in the set-up menu.
Press the RECORD button and disk space will be allocated.
You will be instructed to press PLAY when you are ready to enter the record mode.
Press the PLAY button. Once the digital input signal is valid, DigiCart/II Plus will wait for the audio level to cross the Trigger Threshold. Recording then starts, and will continue until the STOP button is pressed, or the digital input signal stops or becomes invalid.

The recorded format of the resulting Cut is identical to one made from an analog source.

NOTE: DigiCart/II Plus will drop out of the record-ready mode while waiting for a trigger if the digital input becomes invalid.

PLAYING A SINGLE CUT

Rotate the SELECT Control to choose a Cut name.
Press the PLAY Button.

PLAYING MULTIPLE CUTS – FOLLOW-ON PLAY

While playing, select next Cut. You can change layers to select other Drives or Directories.
Press the PLAY Button. The Play button will flash to indicate that at least 1 Cut is waiting to play.
Repeat as needed.
Press the VIEW LIST Button, use the SELECT Control to see items following current Cut.
To stop playback after Current Cuts ends, press the STOP Button once.
To stop playback immediately, press the STOP Button twice.

PAUSE

Used to temporarily interrupt recording or playback, or create Playlists.

Using PAUSE during PLAY or RECORD

Press the PAUSE Button to interrupt.
Press the PAUSE Button again to resume.

Using PAUSE to Create a Playlist — QuickStack, Stack

Press the PAUSE Button.
Select a Cut.
Press the PLAY Button to enter in list.
Select the next Cut and press the Play Button, repeating for each Cut to be entered in the Playlist.
Press the PAUSE Button to Play the list (a QuickStack) or press the ENTER/YES Button to save the list as a STACK.

LOOPING

Causes the current Cut to play continuously from HEAD to TAIL.
Play the cut you want to LOOP.
Press the LOOP Button to activate.
Press LOOP Button again to discontinue or press STOP once to stop at the end of the current LOOP.
Press STOP twice to stop immediately.
Select Cut for Cue selection.
Press and hold the SEC Button.
Press the CANCEL/NO Button.

SECONDARY CUES

Activating a Secondary Cue, closes one pair of "Form C" relay contacts. This contact closure can be used to connect, disconnect or redirect a circuit. Cues may be placed or moved during PLAY or RECORD *and* HEAD or TAIL editing.

Play the selected CUT.
Press the SEC Button where relay should actuate.
Hold for desired duration. The contacts will remain closed for the duration of the Cue.
Programming a Cue will remove any previously programmed Cue.
NOTE: Only one Cue can be programmed per cut.

Deleting A Secondary CUE

Select Cut for Cue deletion.
While pressing and holding the SEC Button, press the CANCEL/NO Button.

SETUP MENU OPERATIONS

Default values for SETUP MENU functions:

SAMPLING RATE & FORMAT	=	DOLBY AC-2 48000 (STEREO)
INPUT MONITOR	=	OFF
THRESHOLD	=	-42dB
OVERWRITE	=	OFF
RECORDING TIME LIMIT	=	NONE
RESTART MODE	=	ON COMPLETION
TIME DISPLAY	=	TIME REMAINING
SORT DIRECTORY BY	=	INDEX
KEYBOARD TYPE	=	MINI
REMOTE CONTROL	=	INACTIVE
CART SPINDOWN	=	ON
SYNC SOURCE	=	ON
SYNC SOURCE	=	INTERNAL
DIGITAL OUTPUT	=	PROFESSIONAL FORMAT
DIGITAL INPUT TYPE	=	AES/EBU XLR-3
AUDIO INPUT TYPE	=	ANALOG

Most SETUP MENU activities use identical steps. Variances and special notes follow. The standard procedure is:

Press the SETUP MENU Button.
Rotate the SELECT Control to choose the option you wish to adjust.
Use POSITION Buttons to select a new value for the option.
Press the ENTER/YES Button to confirm and exit or press either the CANCEL/NO, STOP or PLAY Button to exit.

You can adjust several options and then confirm or cancel all of them at once.

NOTE: Upon BATTERY BACKUP ERROR, all SETUP MENU default settings will be in effect upon restart.

'SAMPLING RATE AND FORMAT'

Use standard steps to select Dolby AC-2, 48000 Stereo, 48000 Mono, 441000 Stereo, 44100 Mono, 32000 Stereo or 32000 Mono.

'INPUT MONITOR'

Use standard steps to select "ON" or "OFF".

DigiCart/II Plus also provides A/D-D/A audio throughput when the REC Button is pressed. Throughput is always in Stereo regardless of recording format selected.

'THRESHOLD'

Provides the option of having the recording process start automatically upon receiving input. When using this mode, if the recording sounds "upcut" (missing the initial information) reset the THRESHOLD to a lower value.

Use standard steps to select between the default value of -42, another of the 11 threshold level values, or OFF. When OFF is selected, Recording begins immediately after pressing RECORD and PLAY.

When using this feature, if the beginning of your recording gets cut off or pops at the beginning of playback set the THRESHOLD to a lower value (a greater negative number, i.e. -60 is a lower threshold than -42).

If recording is starting too soon due to noise in the source being recorded, select a higher THRESHOLD value.

'OVERWRITE'

Permits existing cuts to be directly overwritten in RECORD.

Use standard steps to select ON or OFF.

'RECORDING TIME LIMIT'

Enhances disk space management and expedites entry to Record Ready. Set this value to accommodate your most common Cut length.

Use standard steps to select None, 30 sec., 1 MIN, 5 MIN, 30 MIN or 60 MIN.

'RESTART MODE'

Use standard steps to select ON-COMPLETION or IMMEDIATE.

'TIME DISPLAY'

Use standard steps to select TIME REMAINING or ELAPSED TIME.

'SORT DIRECTORY BY'

Provides for sorting numerically by ID or alphabetically by NAME.

Use standard steps to select INDEX or NAME.

'KEYBOARD TYPE'

Use standard steps to select MINI or STANDARD.

The keyboard should be connected before power is turned on. If connected after power-up and the keyboard fails to respond, press the SEC and the DNET XFER Buttons together to re-initialize system,.

'REMOTE CONTROL'

Selects whether the rear panel Serial Port 2 connector is active.

Use standard steps to select INACTIVE or ADDRESS 01 to ADDRESS 32. (Note that address 01 to 04 correspond to machine control buttons 1 to 4 on the RC220 Remote Control.

'SYNC SOURCE'

Use standard steps to select INTERNAL or EXTERNAL.

'CART SPINDOWN' (TIME–OUT)

Use standard steps to select ON or OFF.

If *spun down*, allow a few seconds for the Cart to *spin up* for next use.

'DIGITAL OUTPUT'

Use standard steps to select OFF, PROFESSIONAL FORMAT, CONSUMER FORMAT or COPY PROT. CONSUMER

'DIGITAL INPUT TYPE'

Use standard steps to select either AES/EBU XLR-3, IEC-958 TYPE II BNC or AES/SMPTE-75 OHM BNC.

'AUDIO INPUT TYPE'

Use standard steps to select ANALOG or DIGITAL.

UTILITY MENU OPERATIONS

CHANGE NAME	COPY EDITED	CLEAR PRESET
ERASE	RENUMBER DISK	FORMAT DISK
COPY ORIGINAL	ASSIGN PRESET	UPDATE DIRECTORIES

TO BEGIN:

SELECT Drive, Directory, Cut or Stack.
Press the UTILITY MENU Button.
Select function.
Press the ENTER/YES Button to continue.
Press the CANCEL/NO, STOP or PLAY Button to exit.

'CHANGE NAME'

SELECT Character.
Use the POSITION Buttons to move blinking cursor to next character position.
Once all characters have been entered, use the POSITION Buttons to move cursor to the position after the last character in the name.
Press the ENTER/YES Buttons to save or the CANCEL/NO Button to exit.

'ERASE'

Press the ENTER/YES Button to permanently ERASE.
Press the CANCEL/NO Button to exit.

'COPY ORIGINAL' — Copying a CUT or STACK

Select the Source Cut (or Stack).
Press the UTILITY MENU Button and select COPY ORIGINAL.
Press the ENTER/YES Button.
Use the POSITION Buttons and select destination Directory.
Press the RIGHT POSITION Button, use SELECT to view contents and choose a Cut to replace.
Press the ENTER/YES Button twice to replace the selected Cut or press the ENTER/YES Button once,
Use SELECT to lockout choose an empty Index number.
Press the ENTER/YES Button to COPY.

'COPY ORIGINAL' — Copying a DIRECTORY

Duplicates complete Cuts in a source Directory.

Select Directory to copy, and stay in the Directory layer.
Press the UTILITY MENU Button and select COPY ORIGINAL.
Press the ENTER/YES Button.
Use SELECT and POSITION Buttons to select destination Directory.

(You can be on the Directory layer or the Cut layer within the chosen Directory.)
Press the ENTER/YES Button.

The display prompts:

```
X.X

  REPLACE DUPL INDEX?
```

Press the ENTER/YES Button to overwrite Cuts with duplicate index numbers.
Press the CANCEL/NO Button to transfer Cuts to empty index locations.

The display prompts:

```
X.X

  REPLACE DUPL NAME?
```

Press the ENTER/YES Button to overwrite Cuts with duplicate names.
Press CANCEL/NO Button to transfer Cuts and leave any Cuts with duplicate names in the destination Directory.

If you answer NO to both INDEX and NAME, DigiCart/II Plus will copy to the chosen Directory, starting with the first unoccupied INDEX number.

Press the CANCEL/NO Button to stop copying after currently displayed Cut.

'COPY EDITED' — *Copying a CUT, STACK or DIRECTORY*

Copies only information between HEAD and TAIL pointers.
Use same procedures as COPY ORIGINAL.

'COPY EDITED' — Copying a STACK to a CUT

A Linear STACK with all Cuts of the same rate and format and no embedded Stacks may be copied to become a CUT. The new Cut will occupy disk space equal to the Stacks' playing time. HEAD and TAIL markers of individual items in the Stack will be copied. FADE IN and OUTPUT GAIN will reflect the Stack's first Cut. FADE OUT is determined by its last Cut. (See Chapter Four).

Select a Linear Stack
Press the UTILITY MENU Button and select COPY EDITED.
Press the ENTER/YES Button.
Use SELECT and the Left and Right POSITION Buttons to determine Destination Directory and Cut.
Press the ENTER/YES Button.
Select a new Index Number and press the ENTER/YES Button or press the ENTER/YES Button a 2nd time to replace the selected Cut.

NOTE: Though seldom used, this procedure can be performed using COPY ORIGINAL. However the Head and Tail markers of the Cuts in the Stack will be ignored.

'RENUMBER DISK'

Use the Left and Right POSITION Buttons and SELECT to enter the number.
Position cursor on last number (even if the number wasn't changed).
Press the ENTER/YES Buttons to save and exit.

NOTE: It is not necessary to clear a PRESET before reassigning it.

'FILE XFER '

This duplicates the action of the DNET XFER to allow access to the FILE TRANSFER MENU from an RC-220 Remote. Please refer to Chapter 6 – DNET.

'FORMAT DISK'

Press the UTILITY MENU Button and select FORMAT DISK.
Select Drive to Format.
(This always defaults to number 0, the Zip Disk Drive.)
Press ENTER/YES to confirm a selection.
Press ENTER/YES to continue.
Press CANCEL/NO to FORMAT and exit to the Drive Layer.

'UPDATE DIRECTORIES'

This menu item optimizes disks created in earlier versions of DigiCart/II Plus to operate with the latest version of software.

Press UTILITY MENU and select UPDATE DIRECTORIES.
Press ENTER/YES to confirm.

'ASSIGN PRESET'- 'CLEAR PRESET'

Please refer to Chapter 3 – "Operating Instructions."

EDIT MENU OPERATIONS

Edit Menu features are:

HEAD (TRIM)	FADE IN	OUTPUT GAIN
TAIL (TRIM)	FADE OUT	PRE-ROLL

Time display is HH:MM:SS:FF.BB: Hours, Minutes, Seconds, Frames and SMPTE Bits. The selected unit shows in the display in brackets, for example <F> for Frames.

Output Gain is in decibels and tenths of a decibel.
Use the Left and Right POSITION Buttons to select units.

Minimum Cut length is about two seconds. Head and Tail times will be limited to maintain this minimum length.

'SETTING THE HEAD POINT WHILE STOPPED'

Enables you to directly enter HEAD point editing information.

Press the EDIT MENU Button.
Rotate the SELECT Control and choose HEAD.
Press the STOP Button.
Rotate the SELECT Control to set the HEAD point.
Press the PLAY Button to audition the new HEAD point.
Repeat as needed.
Press the ENTER/YES Button to save, or CANCEL/NO Button to exit.

'SETTING THE HEAD POINT "ON THE FLY'

Enables you to listen to the Cut when setting the HEAD point. (Where play is to begin)

Press the EDIT MENU Button.
Rotate the SELECT Control and choose HEAD.
Press the PLAY Button. The Time Display will advance and you will hear the Cut play.
Press the STOP Button at the desired time to set the HEAD pointer.
Rotate the SELECT Control to fine tune HEAD point as described above in "SETTING THE HEAD POINT WHILE STOPPED."
Press the PLAY Button to audition.
Repeat fine-tuning and playing as necessary.
Press the ENTER/YES Button to save or CANCEL/NO to exit.
To repeat the setting of the HEAD pointer '"ON THE FLY", you must press the ENTER/YES or CANCEL/NO Button and then re-enter the EDIT MENU.

'SETTING FADE IN WHILE STOPPED'

Enables you to directly enter FADE IN point editing information.

Press the EDIT MENU Button.
Rotate the SELECT Control and choose FADE IN.
Press the STOP Button.
Rotate the SELECT Control to set the FADE IN length.
Press the PLAY Button to audition.
Repeat setting and playing as necessary.
Press the ENTER/YES Button to save or the CANCEL/NO Button to exit.

'SETTING THE FADE IN "ON THE FLY'

Lets you set FADE IN length (which begins at the HEAD point of a cut) while listening to the audio. The maximum FADE IN time is 40 seconds.

Press the EDIT MENU Button.
Rotate the SELECT Control and choose FADE IN.
Press the PLAY Button. The Time Display will advance and you will hear the Cut play.
Press the STOP Button to set end point of FADE IN.
Press the PLAY Button to audition.
Rotate the SELECT Control to fine tune FADE IN length as described above in "SETTING FADE IN WHILE STOPPED."
Repeat fine-tuning and playing as necessary.
Press the ENTER/YES Button to save or CANCEL/NO Button to exit.
To repeat the setting of FADE IN '"ON THE FLY", you must press the ENTER/YES or CANCEL/NO Button and then re-enter the EDIT MENU

'SETTING FADE OUT WHILE STOPPED'

Enables you to directly enter the time ahead of the TAIL pointer where FADE OUT begins.

Press the EDIT MENU Button.
Rotate the SELECT Control and choose FADE OUT.
Press the STOP Button.
Rotate the SELECT Control to set the FADE OUT length.
Press the PLAY Button to audition with PRE-ROLL.
Repeat as necessary.
Press the ENTER/YES Button to save or the CANCEL/NO Button to exit.

'SETTING FADE OUT "ON THE FLY'

Enables you to set the time ahead of the TAIL pointer where FADE OUT begins. The maximum fade out time is 40 seconds.

Press the EDIT MENU Button.
Rotate the SELECT Control and choose FADE OUT.
Press the PLAY Button. The Time Display will advance and the Cut will play.
Press the STOP Button to set start point of FADE OUT.
Rotate SELECT to fine-tune FADE OUT length as described above in SETTING FADE OUT WHILE STOPPED.
Press the PLAY Button to audition with PRE-ROLL.
Repeat fine-tuning and playing as necessary.
Press the ENTER/YES Button to save or CANCEL/NO Button to exit.
To repeat setting FADE OUT "ON THE FLY", press the ENTER/YES Button or CANCEL/NO Button and then re-enter the EDIT MENU.

'SETTING THE TAIL POINT WHILE STOPPED'

Enables you to directly enter the TAIL point. (where the play ends in a selected CUT)

Press the EDIT MENU Button.
Rotate the SELECT Control and choose TAIL.
Press the STOP Button.
Rotate the SELECT Control to set the TAIL point.
Press the PLAY Button to audition the TAIL point from current PRE-ROLL start. Repeat as necessary.
Press the ENTER/YES Button to save or the CANCEL/NO Button to exit.

'SETTING THE TAIL POINT "ON THE FLY'

Lets you set the TAIL point (where the play ends in a selected CUT) while listening to the audio.

Press the EDIT MENU Button.
Rotate the SELECT Control and choose TAIL.
Press the PLAY Button. The Time Display will advance and the Cut will play.
Press the STOP Button to set TAIL pointer.
Rotate the SELECT Control to set the TAIL point as described above in "SETTING THE TAIL POINT WHILE STOPPED."
Press the PLAY Button to audition TAIL point from current PRE-ROLL start.
Repeat fine-tuning and playing as necessary.
Press the ENTER/YES Button to save or CANCEL/NO Button to exit.
To repeat the setting of the TAIL pointer while listening to audio, Press the ENTER/YES Button or CANCEL/NO Button and then re-enter the EDIT MENU.

PRE-ROLL

Enables you to set the time ahead of the TAIL or FADE OUT pointer for auditioning during editing.

Press the EDIT MENU Button.
Rotate the SELECT Control and choose PRE ROLL.
Press either the PLAY *or* STOP Button.
Rotate SELECT to choose a new PRE-ROLL length.
Press the ENTER/YES Button to save or CANCEL/NO Button to exit.

OUTPUT GAIN

Enables you to set the output Gain of a Cut relative to initially recorded level referenced to 0.0 dB.

Press the EDIT MENU Button.
Rotate the SELECT Control and choose OUTPUT GAIN.
Press either the PLAY or STOP Button.
Rotate the SELECT Control to adjust Output Gain.
Press the ENTER/YES Button to save or CANCEL/NO Button to exit.

FIND OPERATIONS

There are numerous Find Operations that use the RC-205 alphanumeric keyboard from 360 Systems to instantly find any Cut or Stack by Name or ID on your DigiCart/II Plus.

Please refer to the operations manual for your RC-205 for complete instruction.

RC-210 and RC-220 Remotes from 360 Systems enable you to find cuts by index number. Please refer to the operations manual for your RC-210 and RC-220 for complete instruction.

If you are interested in any 360 Systems accessory, please contact 360 Systems directly or contact your 360 Systems dealer

♦♦♦♦♦

Chapter Two
SETUP

This Chapter contains information regarding the setup and installation of your DigiCart/II Plus. Technical specifications are provided, along with descriptions of front panel controls and rear panel interfaces. Schematics with pinout information for wiring to rear panel connectors can be found in Appendix A.

INSTALLATION

A full depth rack mounting shelf is recommended to provide adequate support when rack-mounting a DigiCart/II Plus. A dedicated rack shelf that will accommodate one or two DigiCart/II Plus units is available from 360 Systems. Furthermore, your DigiCart/II Plus is also well suited to tabletop operation.

WARNING

CONNECT ONLY TO A GROUNDED 50/60 HZ AC OUTLET PROVIDING THE CORRECT VOLTAGE (115 VAC OR 230 VAC AS DELIVERED).

DO NOT REMOVE OR DEFEAT THE GROUNDING PIN ON THE AC POWER CORD.

A SERIOUS SHOCK HAZARD MAY RESULT FROM FAILING TO MAKE CONNECTION TO A PROPERLY GROUNDED ELECTRICAL OUTLET.

DO NOT USE THIS PRODUCT OUT OF DOORS, IN RAIN, OR IN DAMP OR WET ENVIRONMENTS.

THIS PRODUCT CONTAINS A COOLING FAN. DO NOT COVER THE VENTILATION PORTS WHEN INSTALLING OR USING THE UNIT. FAILURE TO PROVIDE PROPER VENTILATION MAY CREATE A FIRE HAZARD AND CAN VOID YOUR WARRANTY.

TECHNICAL SPECIFICATIONS

PHYSICAL DIMENSIONS

Height	5.19" (130mm) (Standard EIA 1/2-rack, 3U high)
Width	8.50" (213mm)
Depth	17.13" (428mm)
Shipping weight	25 lbs
Net weight less internal hard disk	18.25 lbs (8.3 kg)
Net weight with internal hard disk	21 lbs (9.54 kg)

AUDIO SPECIFICATIONS

Bandwidth	10Hz - 20kHz ±0.5 dB; optionally 15kHz @ Fs = 32,000
Quantization	16 bit linear
Sampling Frequencies	48K; 44.1K; 32K; Stereo or Mono
Dynamic Range	>92 dB
Signal-to-Noise	>90 dB
Distortion (THD+N)	<0.005% ref. to full scale
Interchannel Phase Deviation	<0.1 degree at 15kHz
Interchannel Crosstalk	>90 dB at any frequency
Input Circuit	Electronically balanced with RF suppression; Input Z = 40k ohms each leg; XLR-3 type connectors
Nominal Operating Level	+4dBu Output = 18dBFS Digital
Common Mode Rejection	Better than 60 dB @ 120 Hz
Maximum Input Level	+21 dBu single ended, +27 dBu differential
Output Circuit	Phase corrected differential outputs; short circuit proof & RF protected. Output Z = 100 ohms
Maximum Output Level	+16 dBu single ended, +22 dBu differential
Digital Inputs	AES/EBU*, XLR-3 type Conn., 110Ω; BNC Conn., 75Ω; IEC958 Type II, unbal., BNC connector w/RCA adapter
Digital Outputs	AES/EBU*, XLR-3 type Conn., 110Ω; BNC Conn., 75Ω; IEC958 Type II, unbal., BNC connector w/RCA adapter
Data Reduction	Selectable Dolby AC-2, at 48K stereo only

*AES3-1992 / EBU Tech 3250-E (1985)

NOTE: All audio measurements made at 48K-sample rate, stereo, with linear coding. Measurement bandwidth: 10 Hz to 20 kHz. Analyzer used: Audio Precision System One.

GENERAL SPECIFICATIONS

Removable Cartridge	Zip™ magnetic disk
Insertion/ Removal Cycles	2,000 minimum
Estimated Shelf Life	10 Years
Cartridge Drive Reliability	MTBF: >100,000 hours
Internal Hard Disk	1000 MB standard; larger sizes available
Hard Disk Reliability	MTBF: >250,000 hours
External SCSI Interface	SCSI II 8 Bit, single ended, on 50 pin Centronics® connector
Start/Restart Time	Instantaneous from any location
Cue to Next Cut	Instantaneous
Display	2-line x 20 large character vacuum-fluorescent
Level Metering	Quasi-peak responding LED display
Input Controls	Input level controls on front panel, one each channel
GPI Remote Controls	Remote contracts with return lamp drive; 25-pin "D" connector
Serial Remote Control	Full control with EIA-422; ES-Bus interface; 9-pin "D" connector
Cue Controls	Secondary: SPDT floating relay outputs
Cue Erase	SEC Cues may be individually erased
Cue Relocate	Cues are moved by pressing SEC while playing a Cut
Form Factor	3U half-rack; stand-alone or rack mounting on accessory shelf
Circuit Cards	FR-4 epoxy glass stock, with 94-VO flame retardant rating; gold plated edge connectors
Agency Approvals	All AC components UL approved
	FCC Part 15
	CE
Power	115/230 volts AC, 50/60 Hz, 35 watts
Country of Origin	USA

ZIP DRIVE & CARTRIDGE RELIABILITY

Non-Recoverable Errors	<10 errors in 10^{13} bits
Recoverable Errors	<10 errors in 10^{9} bits
Seek Errors	<1 error in 10^{6} seeks
MTBF	100,000 hours
Drive Insertion/Removal Cycles	10,000 minimum
Disk Insertion/Removal Cycles	2,000 minimum

ENVIRONMENTAL LIMITS (OPERATIONAL)

Drive Temperature:	10° to 32°C (50° to 89.6°F)
Disk Temperature	10° to 32°C (50° to 89.6°F)
Relative humidity, Non Condensing	10 to 80%
Maximum Wet Bulb	26.7°C (80°F)
Maximum Temperature Gradient	12°C/hr (22°F/hr)
Altitude	To 3,048 m (10,000 ft)
Shock	7g 1/2 sine wave for 11 mSec
Vibration	0.7g P-P at 5-17 Hz 0.25g P-P at 17-500 Hz

To reduce the risk the risk of electric shock, do not expose this unit to rain or moisture.
Do not remove the cover.
No user serviceable parts inside.
Refer servicing to qualified service personnel

ENVIRONMENTAL LIMITS (STORAGE & SHIPPING)

	STORAGE	SHIPPING
Drive Temperature	-22° to 52°C (-8° to 126°F)	-40° to 60°C (-40° to 140°F)
Disk Temperature	-22° to 51°C (8° to 124°F)	-40° to 51°C (-40° to 124°F)
Relative Humidity, non condensing	Drive 10 to 90%;	Cartridge 10 to 90%
Disk Drop Height Shock	40 g for 11 mSec	
Shock, Disk	Withstands a 3 foot drop onto a smooth, hard surface	
Vibration (Drive and Cart)	1.3 g at 5-27 Hz; 2 g at 27-60 Hz; 5 g at 60-500 Hz	

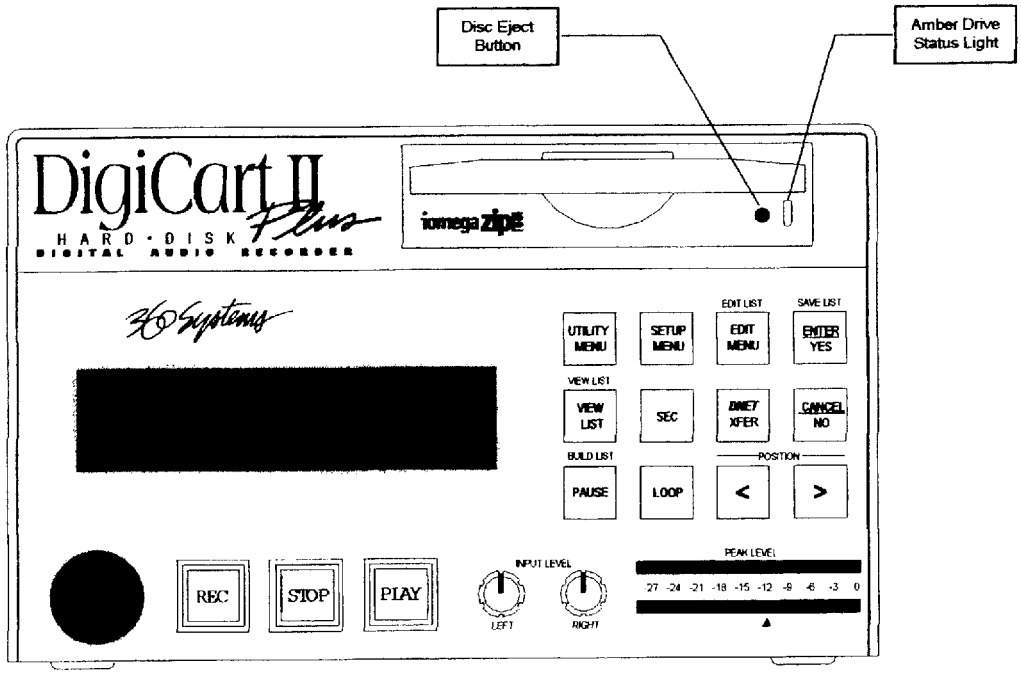

DigiCart/II Plus Front Panel View

FRONT PANEL CONTROLS

THE SELECT KNOB

ROTATE the **SELECT** Knob to:

- Choose Cuts for playback.
- Select Drives or Directories.
- View available menu options.
- Select values and alphanumeric characters.

THE POSITION ARROWS

PRESS Left and Right **POSITION ARROW** Buttons to:

- Navigate between Drive, Directory and Cut layers.
- Select values for different menu functions.
- Select units for editing operations.
- Move the cursor during naming operations.

THE RECORD BUTTON (Illuminates when depressed)

WHEN YOU PRESS the **RECORD** Button DigiCart/II Plus will:

- Allocate blank disk space for recording.
- Turn on the Input Monitor function.
- Enter the RECORD Ready mode. Pressing the PLAY Button will initiate recording and illuminate the Play Button. If a THRESHOLD is not set (See Chapter 1, page 1.9), recording starts immediately. If set, recording starts when the level of the audio input exceeds the THRESHOLD setting. Audio will be recorded at the sampling rate and recording format currently selected in the SETUP MENU. (If using digital inputs, the sampling rate will be automatically set at the same sampling rate as that of the incoming signal. See Chapter Three).

THE PLAY BUTTON (Illuminates when depressed)

PRESS the **PLAY** Button to:

- Initiate playback of a Cut or Stack.

Subsequent presses of the **PLAY** Button will:

- Cause the next cued selection to play immediately or on completion of the current one, dependent on the RESTART MODE.

A **BLINKING PLAY** Button indicates:

- Another Cut is ready for Follow-On play or that Loop Playback is active.

A **SOLID PLAY** Button indicates:

- DigiCart/II Plus will STOP after the current Cut. (See Chapter Three).

THE STOP BUTTON (Illuminates when depressed)

When the **PLAY** Button is Illuminated, **PRESSING** the **STOP** button **ONCE** will:

- Terminate playback or recording.
- When in follow on play, playing a Stack or Loop Playback, end playback upon completion of the present Cut.

PRESS the **STOP** button **TWICE** to:

- End both the present Cut and others selected for follow-on play.

HOLDING the **STOP** Button in will:

- Display the Drive or Disk number and name.
- Display the available recording time remaining on the Drive based on the currently selected recording format.

THE UTILITY MENU BUTTON (Illuminates when depressed)

PRESS the **UTILITY MENU** Button to:

- Enable the selection of Drive, Directory, Cut and Stack management functions.
- After pressing, rotate the SELECT Knob to view your options. Press the ENTER/YES Button to initiate the chosen function, or either the CANCEL/NO, STOP or PLAY Buttons to terminate the selection.

THE SETUP MENU BUTTON (Illuminates when depressed)

PRESS the **SETUP MENU** Button for:

- Access to functions related to audio behavior of your DigiCart/II Plus.
- Rotate the SELECT Knob to view your options. (The Setup settings are stored in non-volatile memory.)

THE EDIT MENU BUTTON (Illuminates when depressed)

PRESS the **EDIT MENU** Button for:

- Access to non-destructive editing functions.
- To edit a playlist. Rotate the SELECT Knob to your view options.

THE ENTER/YES BUTTON

PRESS the **ENTER/YES** Button to:

- Confirm, continue or complete an operation.
- Save a playlist.

THE CANCEL/NO BUTTON

PRESS the **CANCEL/NO** Button to :

- Cancel or abort an operation.
- Answer "no" to a query from the display.

THE VIEW LIST BUTTON (Illuminates when depressed)

PRESS the **VIEW LIST** Button to:

- View the contents of a STACK.
- View the contents of the playlist during follow on playback.

THE SEC BUTTON (Illuminates when depressed)

PRESS the **SEC** Button to:

- Write a secondary Cue. A secondary Cue is a contact closure created for control applications. During RECORD, PLAY or EDIT of a Cut, both the press and release of the SEC button are stored and determine the duration of the Secondary Cue. The SEC Button will illuminate when pressed and throughout the duration of a Secondary Cue. Only one Secondary Cue can be recorded per cut. To change the timing of a Secondary Cue, simply re-record it. To delete it from the selected Cut, hold CANCEL/NO and press SEC while in STOP mode. (See Appendix A for wiring details.)

THE PAUSE BUTTON (Illuminates when depressed)

PRESS the **PAUSE** Button to:

- Activate or release Pause mode in PLAY or RECORD.
- In STOP mode to build a playlist or STACK.

THE LOOP BUTTON (Illuminates when depressed)

PRESS the **LOOP** Button to:

- Activate Looping during PLAY. The current CUT will continue to cycle until LOOP is pressed again. The PLAY Button will flash until the STOP Button is pressed once or LOOP is pressed again. The LOOP function cannot be activated in STOP mode.
- In Loop mode, Pressing STOP twice will stop playback immediately.

THE *DNET* XFER BUTTON (Illuminates when depressed)

PRESS the ***DNET* XFER** Button to:

- Activate DNET transfer functions. DNET is used to transfer Cuts, Directories, Stacks or entire Drives between two DigiCarts. Please refer to Chapter Seven: DNET Operation for details instructions.

THE INPUT LEVEL KNOBS

The **INPUT LEVEL** knobs:

- Adjust the record level for the left and right audio channels.

THE PEAK LEVEL METERS

- DigiCart/II Plus uses quasi-peak reading LED level meters for monitoring left and right channel audio levels. These meters have been selected over standard VU meters for their advantages in monitoring digital audio.

THE REAR PANEL

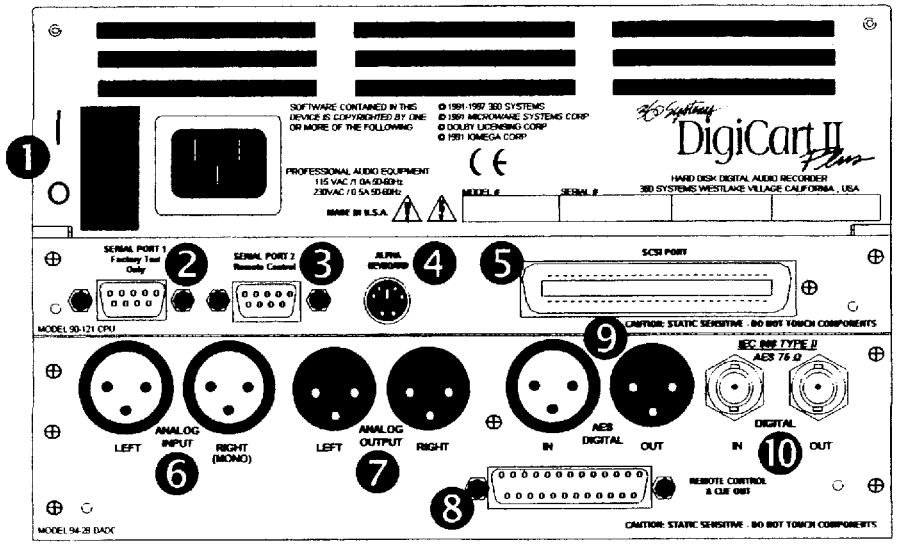

Table 1: Rear Panel Interfaces and Connector Types

Ref.	Description	Connector Type
1	Power cable connector and switch	IEC 320
2	Serial Port 1- Interface for factory diagnostics	9-pin "D" female
3	Serial Port 2 - EIA-422 serial communications including RC-210/220 Remote Controls	9-pin "D" female
4	Port for QWERTY keyboard	6-pin Mini DIN
5	SCSI Port	50-pin Centronics female
6	Left and Right balanced analog audio inputs	3-pin XLR female
7	Left and Right balanced analog audio outputs	3-pin XLR male
8	Transport remote control interface	25-pin "D" female
9	AES/EBU digital audio input, left and right AES/EBU digital audio output, left and right	3-pin XLR female 3-pin XLR male
10	IEC-958 TYPE II or AES/SMPTE 75Ω digital audio input, left and right IEC-958 TYPE II or AES/SMPTE 75Ω digital audio input, left and right	BNC female BNC female

REAR PANEL INTERFACES

Several of the most useful standards have been selected to interface DigiCart/II Plus with professional audio-video equipment and allow functioning with existing automation systems and simplify the development of new and custom applications. Detailed technical information about the interfaces will be found in Chapter Five: Maintenance Guide.

SCSI INTERFACE *(Figure 2. Reference 5)*

WARNING: THE SCSI CONNECTOR ON YOUR DIGICART/II PLUS IS A CENTRONICS® 50 PIN CONNECTOR *(Figure 2. Reference 5)* AND MAY HAVE TO BE ADAPTED TO INTERFACE WITH THE 25 PIN "D" CONNECTOR FOUND ON SOME SCSI DEVICES.

DO NOT CONNECT A SCSI DEVICE TO THE DIGICART/II PLUS 25 PIN "D" REMOTE CONTROL CONNECTOR. SEE FIGURE 2 REF. 8

ALTHOUGH THE REMOTE CONTROL CONNECTOR ON YOUR DIGICART II/PLUS WILL MATE TO A SCSI CABLE, THIS IS NOT A SCSI INTERFACE!! CONNECTING A SCSI DEVICE TO THIS CONNECTOR WILL SEVERELY DAMAGE THE SCSI DEVICE.

The SCSI standard ensures future compatibility of DigiCart/II Plus with larger drives as technology advances. Up to seven Drives, including the internal drives can be connected to the SCSI Bus at one time.

When external disk drives are added, special attention to SCSI details is required. See the External Hard Disk and External Zip Drive sections at the end of the book for further information on the operation of DigiCart/II's SCSI Bus.

EIA-422 SERIAL INTERFACE

Two separate EIA-422 serial ports are included on the rear panel. All of the functions of DigiCart/II Plus can be accessed and controlled via Serial Port 2.

Serial Port 1*(Figure 2 - Reference 2)*

Currently used for factory test only.

Serial Port 2 *(Figure 2 - Reference 3)*

Serial Port 2 provides bi-directional communication with DigiCart/II Plus. The port utilizes an EIA-422 electrical standard with an ES-Bus protocol and with properly terminated lines can communicate over 1,000 meters. Specifics of this can be found in Appendix B - Remote Control Serial Protocol. The following pinout is used on Serial Port 2:

Pin–1	-	GND
Pin–2	-	+5 VOLTS (Not normally used)
Pin–3	-	GND
Pin–4	-	TX +
Pin–5	-	TX -
Pin–6	-	HSK OUT (Not normally used)
Pin–7	-	HSK IN (Not normally used)
Pin–8	-	RX +
Pin–9	-	RX -

REMOTE CONTROL *(Figure 2 - Reference 8)*

The Remote Control connector offers Transport Control functions on a single 25-pin "D" connector. Please refer to Chapter 5, Page 10- Remote Control.

WARNING: ALTHOUGH THE REMOTE CONTROL CONNECTOR ON YOUR DIGICART II/PLUS WILL MATE TO A SCSI CABLE, THIS IS NOT A SCSI INTERFACE!! CONNECTING A SCSI DEVICE TO THIS CONNECTOR WILL SEVERELY DAMAGE THE SCSI DEVICE. REFER TO CHAPTER 2, PAGE 11.

Transport Control Buttons

The PLAY, STOP and RECORD remote control inputs are optically isolated from DigiCart/II's circuitry; a common floating return is provided. +12V may be sourced from pin 17, or provided from an external source. Current limiting resistors are provided within DigiCart/II Plus so that voltage may be applied directly between ground on pin 4, and either the PLAY, STOP or RECORD control inputs.

NOTE: If +12V is sourced from DigiCart/II Plus, the optical isolators no longer provide isolation. Refer to the partial schematic of DigiCart/II's interface circuits in Appendix A - SCHEMATICS.

Transport Control Lamps

PLAY, STOP and RECORD lamps are 12-volt incandescent bulbs having +12V connected to one side. An open-collector transistor is used to bring the low side to ground to turn the lamp on. This transistor is used for the lamps internal to the DigiCart/II Plus, and for external lamps on remote switches. +12V is available on pin 17 of the remote connector for use with external lamps. Refer to the schematic of DigiCart/II's interface circuits in Appendix A.

CUE OUTPUT — *Secondary (Figure 2 - Reference 8)*

Just as with NAB analog tape carts, cue markers are provided for triggering the PLAY buttons on other machines, or as an "alert" or end-of-message cue. For applications other than broadcast, they may be used to provide flag codes or a status output for interface with show controllers, automation systems, or lighting and special effects devices.

The secondary cue output appears on a female 9-pin "D" connector on the rear panel. Both normally open and normally closed contacts are provided. These low voltage relays are designed to switch a maximum of 28V at 500mA.

ALPHANUMERIC KEYBOARD *(Figure 2 - Reference 4)*

An alphanumeric keyboard may be connected to the ALPHA KEYBOARD rear panel port on your DigiCart/II Plus for controlling the machine and adding Names to Cuts, Directories, Stacks and Disks. The DigiCart/II Plus provides a 6-pin mini-DIN connector for keyboard interconnection.

Selecting Keyboard Type

The SETUP MENU provides a choice of between the standard 101-key PC-AT style keyboard, and a Model RC-205 a small footprint **MINI** keyboard available from 360 Systems. **Contact your 360 Systems Dealer for details.**

To choose between keyboard types:

1 Press the SETUP MENU Button. (It will illuminate when pressed.)

2. Turn the SELECT Control the until display indicates either:

KEYBOARD TYPE

STANDARD

or

KEYBOARD TYPE

MINI

3. If desired, press the Left *or* Right POSITION Buttons to select the alternate menu item.

4. Press the ENTER/YES Button to confirm.

The selection will be stored in non-volatile memory, so that if DigiCart/II Plus is turned off, the correct keyboard will be selected on power-up.

NOTE: The keyboard must be connected at the time of power-up, or DigiCart/II Plus will not recognize it. If connected after power is on, press SEC and the DNET XFER button to its immediate right together to re-initialize (soft re-boot) the system.

Keyboard Pinout

Function keys F1 through F12 and arrow keys have been "mapped" to front panel buttons and SELECT knob for remote control of all DigiCart/II Plus functions. Pinouts are the same for both keyboard types.

Pin–1 -	DATA
Pin–2 -	NC
Pin–3 -	GROUND
Pin–4 -	+5
Pin–5 -	CLOCK
Pin–6 -	NC

Keyboard Mapping Assignments

Small footprint MINI keyboards are available from 360 Systems as model number RC-205. Contact your 360 Systems Dealer for more information.

The chart below shows mapping of keys to DigiCart/II Plus functions.

KEY	MINI KEYBOARD FUNCTIONS	STANDARD KEYBOARD FUNCTIONS
F1	UTILITY MENU	UTILITY MENU
F2	SETUP MENU	SETUP MENU
F3	EDIT MENU	EDIT MENU
F4	VIEW LIST	VIEW LIST
F5	~~PAUSE~~ FIND	PAUSE
F6	PAUSE	LOOP
F7	LOOP	SECONDARY
F8	RECORD	DNET XFER
F9	STOP	FIND
F10	PLAY	RECORD
(FN) F11	SECONDARY	STOP
(FN) F12	DNET XFER	PLAY
UP ARROW	SELECT KNOB CW	SELECT KNOB CW
DOWN ARROW	SELECT KNOB CCW	SELECT KNOB CCW
LEFT ARROW	LEFT POSITION ARROW	LEFT POSITION ARROW
RIGHT ARROW	RIGHT POSITION ARROW	RIGHT POSITION ARROW
ENTER / RETURN	ENTER/YES	ENTER/YES
ESCAPE	CANCEL/NO	CANCEL/NO
0 - 9	INDEX NUMBER LOCATORS	INDEX NUMBER LOCATORS
SCROLL LOCK	PRESETS	PRESETS

Chapter Three

OPERATING INSTRUCTIONS

This Chapter contains detailed operating instructions for each function of your DigiCart/II Plus. It presents the steps you should take to set up and become familiar with your new machine. These are followed by complete explanations of advanced features of the DigiCart/II Plus including editing, looping and stacking

RECORDING YOUR FIRST CUTS

DigiCart/II Plus records new Cuts in blank space on a Drive, so you do not have to be concerned about recording over existing Cuts. The default RECORD format is Dolby AC-2 48K, stereo, but you may reset this to any of the other standards. For most operations, Dolby AC-2 is the appropriate selection. To change the default settings, refer to SETUP MENU OPERATION later in this Chapter.

When you make a recording, do not be concerned with "tight" starts of the source material or quick stops of the recording at the end of a Cut. DigiCart/II Plus simplifies precise, *non-destructive* HEAD and TAIL trims beyond anything you can do with a razor blade on open reel audio tape. Optional THRESHOLD RECORD mode provides automatic HEAD trims.

NOTE: DigiCart/II Plus limits the minimum length of a Cut. When you press STOP while recording, DigiCart/II Plus may continue recording briefly until the minimum Cut length of about 2 seconds has been attained.

SELECTING A DRIVE

Your DigiCart/II Plus contains an internal Hard Disk and an internal Zip Drive and will also support a second internal Hard Disk, external Hard Disks and an external Zip Drive. You can select a particular Drive for your first recordings. (To use the Zip Disk, it must first be formatted. See FORMATTING A DISK later in this chapter).

After booting up, the display will show:

```
1.0001          PLAY ME

00:00:00        48K AC-2
```

1. *Press the Left POSITION Button. The display will indicate:*

```
1.0                     0

      SELECT DIRECTORY
```

2. *Press the Left POSITION Button again. The display will indicate:*

```
1.

      SELECT DRIVE
```

3. *Rotate the SELECT Control to choose the number of the Drive you want to use. The Zip Disk drive is 0; the internal hard Disk is 1.*

4. *Press the Right POSITION Button. The display will again show:*

```
1.0                     0

      SELECT DIRECTORY
```

5. *Rotate the SELECT Control until the number of the Directory you want to use appears as the second character in the upper left corner of the display.*

6. *For your first recording, you may choose to leave the number "0". Later you may easily move the Cut to another Directory.*

7. *Press the Right POSITION Button. The display will show:*

```
1.0001          PLAY ME

00:00:00        48K AC-2
```

CHECKING AVAILABLE DISK SPACE

The DigiCart/II Plus cannot record or copy a Cut to a Disk that is full. It will indicate DISK IS FULL and abort the operation. Before recording or copying a Cut, note the Cut length and compare it with the available Disk space, which is displayed when the front panel STOP button is held depressed continuously.

Remember that the remaining time is valid *only* for the currently selected sampling frequency and mono/stereo choice. If DigiCart/II Plus is set to some other sampling rate and you need to know the exact time remaining, temporarily set it to match the Cut to be copied. (This is done only for your information; there is no technical reason to do this prior to copying a Cut.)

As a rule of thumb, remember that going from mono to stereo cuts the available time in half, and vice-versa. Also, recordings made at 32K samples use two-thirds as much Disk space as those made at 48K.

SETTING RECORD LEVELS

1. Using tone, set a "zero" level on the mixer or other program source.
2. Press the REC Button to view the input signals.
3. Adjust the INPUT LEVEL controls so that **-12** meter segments are lighted and the **-9** segments are "just off".

   At this setting the output level matches the input level providing unity gain plus 12 dB headroom. If tone is not available, play some program material and adjust the controls to place peak readings in the red (above **-6**) on the loudest signals.
4. While recording, always watch the DigiCart/II Plus meter. Any illumination of the red **"0"** segments indicates probable distortion.

RECORDING

1. SELECT a Drive on which to record.

   If you do not SELECT a Directory, DigiCart/II Plus will record in Directory 0.

   NOTE: The Stack Directory, S, contains only lists. If you try to RECORD to Directory S, the display will briefly flash:

```
1.0                    1

      SELECTION ERROR
```

and then it will switch to the Cut Layer of the Stack Directory. Press the Left POSITION Button and use SELECT to locate your directory number for recording.

2. Press the REC Button. DigiCart/II Plus will quickly scan the Drive you have selected, identifying blank space on which to record.

   The display will show:

```
      RESERVING SPACE

        PLEASE WAIT
```

   When DigiCart/II Plus completes space allocation, the display prompts:

```
1.0000                 NEW_0000

   PRESS PLAY TO START
```

3. Press the PLAY Button to begin recording.

   The display will show:

```
1.0000                 NEW_0000

NEW_000                00:00:00
```

   The clock will begin counting upward or if you are using THRESHOLD RECORD, the display will show:

```
      TRIGGER -XX DB

NEW_000                00:00:00
```

DigiCart/II Plus is now waiting for incoming audio at or above -XX dB. Recording will begin instantly when this level is reached. Depending on the type of material you are using, you may use SETUP MENU commands to adjust the Trigger THRESHOLD level in 6 dB steps from -60 to -6 dB When switched to OFF, recording will begin when you press PLAY. The display will show "Recording".

4. Press the STOP Button when finished recording or press the PAUSE Button if you wish to add other material to the Cut. After stopping, the display will show:

```
1.0000              NEW_000

   HH:MM:SS   48K   AC-2
```

5. Press the PAUSE Button again to resume recording.

   NOTE: Spaces between items recorded using PAUSE cannot be edited. However, separate Cuts may be played back-to-back seamlessly.

The automatic Cut identification system of DigiCart/II Plus is designed to speed things up in a fast-paced production setting. To audition a newly recorded Cut, you can press the Play Button immediately after recording it (without having to rewind as you would with an analog recorder) or press the RECORD Button and DigiCart/II Plus will immediately begin to allocate space for another recording.

Your first recording will be given the lowest available index number and named NEW_000. Repeat the process and record another Cut. This will become ID number and named NEW_001.

NOTE: Automatic Numerical Cut names increment independently of ID numbers. The two may not match. Details for renaming Cuts will be found under CHANGE NAME later in this chapter. It is helpful to jot down the five-character identifier near the name of the source Cut on the tape log or track sheet. Later you will probably want to use the CHANGE NAME function of the UTILITY MENU to add the name of the Cut to DigiCart/II Plus 's display.

PLAYING CUTS

SELECTING A DRIVE

To select a source Drive:

1. Press the Left POSITION Button twice.

   The display will indicate:

```
X.                    DRIVE NAME

          SELECT DRIVE
```

2. Use SELECT until the number of the Drive you want to use appears in the upper left corner of the display. If labeled, the NAME will appear to the upper right.

   Drives that are neither installed nor formatted can't be Selected.

SELECTING A DIRECTORY

Directories are contained in the Directory layer. The following procedures may be used to select a Directory depending upon your current location within the DRIVE – DIRECTORY - CUT layer hierarchy. For more information about moving between the layers, see Chapter One: *NAVIGATION.*

1a. To enter the Directory layer from the SELECT DRIVE prompt, press the Right POSITION Button.

1b. To enter the Directory layer from the Cut layer (Cut Select Mode), press the Left POSITION Button.

Once you are in the Directory layer, the top line of the display will indicate the current Drive, Directory and Directory Name, if labeled, or the Directory number as a name. To change a Directory Name, see *UTILITY MENU OPERATIONS:* CHANGE NAME later in this chapter.

The bottom line will show the SELECT DIRECTORY prompt:

```
X.X                   DIRECTORY NAME

          SELECT DIRECTORY
```

2. Use the SELECT Control until the Directory ID or NAME you want to use appears in the top line of the display.

SELECTING A CUT

Once you have selected a Drive and Directory containing the Cut you want to play, press the Right POSITION Arrow once to enter the Cut layer. This is the standard operating mode for DigiCart/II Plus, referred to as the *Cut Select Mode*. In this mode, the display will indicate the currently selected Drive/Directory/Cut ID and Cut Name on the top line; and the total playing time, sampling rate, and recording format for that Cut on the bottom line:

```
X.XXXX          CUT NAME

HH:MM:SS        48K   AC-2
```

To select a Cut, rotate the SELECT Control until the ID/Name of the Cut you wish to play appears in the top line of the display. Only IDs containing program will be displayed.

PLAYING A SINGLE CUT

In the Cut Select Mode:

1. Turn the SELECT Control until the name of the Cut you want to play appears in the top line of the display.
2. Press the PLAY Button.

   To select and play a Cut from a different Drive and/or Directory, use the POSITION Buttons and SELECT Control to choose a new Drive and/or Directory, then repeat steps 1 and 2.

PLAYING MULTIPLE CUTS — *FOLLOW-ON PLAY*

NOTE: For Follow-On play, the RESTART MODE selection in the SETUP MENU must be set to ON COMPLETION.

While one Cut is playing,

1. Rotate the SELECT Control until the name of the next Cut you want to play appears on the top line of the display.
2. If the Cut is in a different Drive or Directory, use the Left and Right POSITION Buttons and the SELECT Control to locate the Cut.
3. Wait until the current Cut is done playing, then press the PLAY Button to begin playback of the new Cut or press the PLAY Button for Follow-On play. It will blink indicating that another Cut has been selected for immediate Follow-On play.

NOTE: You may select as many Cuts as you wish for automatic Follow-On Play by repeating steps 1 and 2 above. The last selected Cut will be visible in the first line of the display; the second line shows NAME and Time information about the Cut that is currently playing.

To see playlist items following the one now playing:

1. Press the VIEW LIST Button.
2. Use the SELECT Control to scan the list.

To Cancel an automatic Follow-On playlist:

3. Press the STOP Button once.

The PLAY Button will go solid, indicating that DigiCart/II Plus will discontinue Playback at the end of the current Cut.

Press the STOP Button twice to immediately Cancel playback of all Cuts including the current Cut:

PAUSE

Temporarily interrupts recording or playback of a Cut. It is also used to create Playlists. (See *QuickStack* in the next chapter).

PRESSING PAUSE IN PLAY MODE

1. Begin playback of the Cut by pressing the PLAY Button.
2. At any point during playback, press the PAUSE Button to interrupt. The Pause Button will illuminate to show that DigiCart/II Plus is in PAUSE.
3. To continue playback, press the PAUSE Button again. The Button will go dark and playback will resume.

   NOTE: There's no limit to the number of times the Pause Button can be pressed during Playback or Recording of a Cut. However, pressing pause during fade in will cause the fade in to start over when the Pause button is released.

PRESSING PAUSE IN RECORD MODE

1. Begin recording of the Cut by pressing the PLAY Button.
2. At any point during RECORD, press PAUSE to interrupt. The Pause Button will illuminate to show that DigiCart/II Plus is in PAUSE.

3. To continue Record, press the Pause Button again. The Button will go dark and recording will resume.

   NOTE: There's no limit to the number of times the PAUSE Button can be pressed during playback or recording of a Cut.

LOOPING

Looping causes the currently selected Cut to play continuously. The current TAIL and HEAD pointers will always determine the Loop point for that Cut. (*i.e.*- The Cut will play from HEAD to TAIL continuously.) To activate Looping, press the LOOP button while the Cut is playing. The LOOP button will illuminate. Once Looping is on, that Cut will play continuously until Looping is turned off by one of the methods listed below.

Looping can be turned on and off during consecutive playback of multiple Cuts without affecting the Playlist. While one Cut is looping, you may use the SELECT Control and press the PLAY Button to add additional Cuts to the Playlist. When you turn off Looping, DigiCart/II Plus will proceed with playback of the remaining Cuts in the Playlist.

In the case of Stack Mode Playlists, Looping will operate without affecting the contents of the Stack. If Looping is turned off by pressing the LOOP button, the Stack will continue playing normally until completed.

TURNING LOOPING ON

1. Press the LOOP Button during playback of a Cut.

2. The LOOP Button will illuminate and the currently selected Cut will play continuously until Looping is turned off.

   Also, the PLAY button will blink to show that Looping is active.

TURNING LOOPING OFF

1. When the LOOP Button is illuminated (indicating that LOOP is active), pressing either the LOOP *or* STOP Button will turn Looping off.

2. The Cut currently looping will play to completion.

3. If there are no additional Cuts selected in the playlist, the PLAY button will go solid, indicating that playback will stop at the end of the current Cut. If other Cuts exist in the playlist, the PLAY button will continue to blink, indicating that DigiCart/II Plus will continue playback of the remaining Cuts in the playlist.

4. Press the STOP Button to cancel Looping and end playback at the next TAIL pointer.
5. Press the STOP Button twice to immediately cancel Looping and playback of the current Cut, and all other Cuts in the playlist.

CUES

A cue pointer is stored as part of a Cut's header. It is used to control a relay circuit present on the rear panel CUE OUTPUTS connector on a DigiCart/II Plus. The relay provides "Form C" contacts allowing you to connect or disconnect a circuit. You may also redirect a signal from one destination to another, or select between two available signals when the cue occurs. The Secondary cue output also appears on the Remote Control connector.

Secondary cues are not audio tones and do not require Disk space or an extra track. DigiCart/II Plus remembers *when* and *how long* you press and release the SEC button and places pointers in the audio file at those times. An LED lights to indicate the presence and duration of the cue.

SECONDARY CUES

Creating A Secondary Cue:

1. Select the Cut for placement of a Secondary.
2. Press the PLAY Button to begin playback.
3. Press the SEC Button at the location where you want the Secondary relay to actuate.

The relay will remain active until the button is released.

NOTE: Cues may also be placed during RECORD and HEAD or TAIL editing operations. Secondary appears as end-of-message on the EOM pin of the rear panel Remote Control connector.

Changing A Secondary Cue:

1. To relocate a Secondary cue in an audio file, press the PLAY Button to initiate playback.
2. Press and release the SEC Button at the point where you want to place the new Secondary.

DigiCart/II Plus will automatically erase the old Secondary and place the new Secondary where you press SEC.

Deleting/Erasing a Secondary Cue

Make sure the correct Cut name appears in the display. While pressing and holding the SEC Button, press the CANCEL/NO Button.

The display will show:

```
X.XXXX          CUT NAME

   DELETING SECONDARY
```

When the Secondary has been deleted, DigiCart/II Plus returns to Cut Select Mode.

SETUP MENU OPERATIONS

The SETUP MENU structures the operational behavior of your DigiCart/II Plus when recording and playing Cuts and includes functions relating to general machine usage. SETUP MENU selections are stored in non-volatile memory. The most recently selected values will remain until you decide to change them.

SETUP MENU OPERATIONS

1. Press the SETUP MENU Button to enter the menu.
2. Use the SELECT Control to view menu options.
3. Follow the screen prompt to activate an option.
4. Press either the CANCEL/NO, STOP or PLAY Buttons to exit Setup Menu.

Default values for SETUP MENU functions are:

SAMPLE RATE & FORMAT	=	DOLBY AC-2 48,000 (STEREO)
INPUT MONITOR	=	OFF
THRESHOLD	=	-42 dB
OVERWRITE	=	OFF
RECORDING TIME LIMIT	=	NONE
RESTART MODE	=	ON COMPLETION
TIME DISPLAY	=	TIME REMAINING
SORT DIRECTORY BY	=	INDEX
KEYBOARD TYPE	=	MINI
REMOTE CONTROL	=	INACTIVE
CART SPINDOWN	=	OFF
DIGITAL OUTPUT	=	PROFESSIONAL FORMAT
DIGITAL INPUT TYPE	=	AES/EBU XLR-3
SYNC SOURCE	=	INTERNAL
AUDIO INPUT TYPE	=	ANALOG

SAMPLE RATE AND FORMAT

The sample rate used to record a Cut will determine the audio bandwidth of that Cut. Selecting a sample rate of 48 kHz or 44.1 kHz will yield 20kHz bandwidth. Selecting 32 kHz sample rate will yield greater Drive recording capacity, but will reduce bandwidth to 15 kHz.

DigiCart/II Plus stores the sample rate as part of a Cut's header and will always read the header to configure itself for correct playback. Digital recordings use the selected format but ignore the selected sample rate because the sample rate is specified by the incoming digital data.

DOLBY® AC-2 CODING

The default recording format of DigiCart/II Plus is Dolby AC-2 at a sample rate of 48kHz. Compared to 16-bit linear coding on DigiCart/II Plus, AC-2 stores more than five times as much audio. When AC-2 is selected, digital audio is processed through a data compression algorithm that reduces the amount of data necessary for high quality audio. On playback, a complementary process decodes the AC-2 information, delivering digital audio in a linear format to the D/A converters. The dynamic range and frequency response of 16-bit linear recording is not diminished by the use of AC-2.

To achieve the maximum amount of storage time on your DigiCart/II Plus, you should record with AC-2. Recording with AC-2 uses about one-fifth the amount of storage space as a comparable linear recording.

Note: The sample rate and format must be set to DOLBY AC2 48000 for 48K digital inputs to be compressed with Dolby AC2. Dolby AC2 compression is not available for the 32K and 44.1kHz.

Once Cuts have been recorded, they cannot be converted from one format to another.

STEREO AND MONO RECORDING

A Cut can be recorded in Stereo or Mono. Mono recordings will play back on both output channels simultaneously. When recording a mono signal, it should be fed into the Right channel.

Recordings made in the Dolby AC-2 format are "stereo only," however, Mono material may be recorded on one or both AC-2 channels.

DRIVE STORAGE TIMES

	20 kHz/48K DOLBY AC2	20 kHz/48K LINEAR	20 kHz/44.1K LINEAR	15 kHz/32K LINEAR
HD-1000	590 min	110 min	120 min	165 min
HD-2000	970 min	180 min	195 min	270 min
HD-3000	1485 min	275 min	300 min	415 min
Zip 100 MByte	46 min, 20 sec	8 min, 40 sec	9 min, 25 sec	13 min

Times quoted are approximate. Storage times may vary with actual use, depending on the combinations of bandwidths and sample rates stored on a drive, and the length and number of Cuts and Stacks.

SELECTING SAMPLE RATE AND FORMAT

1. By pressing the SETUP MENU Button and rotating the Select knob to Sample Rate and Format, you may use the Left and Right Position Buttons to choose between:

```
SAMPLE RATE    &    FORMAT

DOLBY    AC-2    48000
```

Or

```
SAMPLE RATE    &    FORMAT

48000 STEREO
```

Or

```
SAMPLE RATE    &    FORMAT

48000 MONO
```

Or

```
SAMPLE RATE    &    FORMAT

44100 STEREO
```

Or

```
SAMPLE RATE    &    FORMAT

44100 MONO
```

Or

```
SAMPLE RATE    &    FORMAT

32000 STEREO
```

Or

```
SAMPLE RATE    &    FORMAT

32000 MONO
```

2. Use the Left and Right Position Buttons to select the desired Rate. Press the ENTER/YES Button to confirm your selection or CANCEL/NO to exit and restor the origianl value.

ANALOG OR DIGITAL AUDIO INPUT

1. Press the SETUP MENU Button and use the SELECT Control until the display shows either:

```
AUDIO INPUT TYPE

DIGITAL
```

or

```
AUDIO INPUT TYPE

ANALOG
```

2. If desired, use the Left and Right POSITION Buttons to select the alternate menu selection.
3. Press the ENTER/YES Button to confirm your selection.

DIGITAL INPUT TYPE

Selects the type of digital audio input.

1. Press the SETUP MENU Button and use the SELECT Control until the display shows either:

```
DIGITAL  INPUT TYPE

AES/EBU          XLR-3
```

or

```
DIGITAL  INPUT TYPE

AES/SMPTE-75 OHM  BNC
```

or

```
DIGITAL  INPUT TYPE

IEC-958   TYPE II   BNC
```

2. If desired, use the Left and Right POSITION Buttons to select the correct menu item.

   NOTE: The Display describes the input type and the connector interface. See Chapter 2, Pg. 10

3. Press the ENTER/YES Button to confirm your selection.

DIGITAL OUTPUT

The DigiCart/II Plus can output audio on all output connectors simultaneously. The analog connectors always output analog audio. However, the DIGITAL OUTPUT can be disabled or enabled and can output data in one of three selected formats. The DIGITAL OUTPUT menu enables or disables the digital outputs and selects the format of the digital audio at the outputs.

By default, recordings made from the analog inputs and the professional AES/EBU and AES/SMPTE-75 inputs are not copyright protected when output in the consumer format. The COPY PROTECTED CONSUMER MODE allows non-protected material to be output as a copyright protected original in the consumer format.

NOTE: The XLR outputs should not be used when the CONSUMER and COPY PROTECTED CONSUMER settings are selected.

1. Press the SETUP MENU Button and rotate the SELECT Control until the display indicates:

```
DIGITAL   OUTPUT

XXXXXX
```

2. Use the Left and Right POSITION Buttons to select:

```
DIGITAL  OUTPUT

PROFESSIONAL FORMAT
```

Or

```
DIGITAL  OUTPUT

CONSUMER FORMAT
```

Or

DIGITAL OUTPUT

COPY PROT. CONSUMER

Or

DIGITAL OUTPUT

OFF

3. Press THE ENTER/YES Button to confirm.

INPUT INTERFACE TABLE

INTERFACE	DESCRIPTION	CONNECTOR
ANALOG INPUT	Electronically Balanced	3-pin XLR female
ANALOG OUTPUT	Phase Corrected Balanced +22 dBu Maximum Signal Level	3-pin XLR male
DIGITAL INPUT	AES/EBU (Professional)	3-pin XLR female
DIGITAL INPUT	AES/SMPTE 75 OHM (Professional)	BNC female
DIGITAL INPUT	IEC-958 TYPE II (Consumer)	BNC female
DIGITAL OUTPUT	AES/EBU (Professional)	3-pin XLR male
DIGITAL OUTPUT	AES/SMPTE 75 OHM (Professional)	BNC female
DIGITAL OUTPUT	IEC-958 TYPE II (Consumer)	BNC female

'INPUT MONITOR'

Allows you to monitor audio that has been processed through the digital audio circuitry at the currently selected sampling rate.

1. Press the SETUP MENU Button and use the SELECT Control until the display shows either:

INPUT MONITOR

OFF

or

INPUT MONITOR

ON

2. If desired, use the Left and Right POSITION Buttons to select the alternate menu item. The input will available immediately if ON is selected.
3. Press the ENTER/YES Button to confirm your selection. Pressing CANCEL/NO will revert to the original value.

NOTE: DigiCart/II Plus automatically provides "pass through" A/D - D/A audio when the REC button is pressed. Therefore, most operations may be accomplished with the INPUT MONITOR: OFF.

'TIME DISPLAY'

Determines whether the counter will display time as ELAPSED (count-up) or REMAINING (countdown).

1. Press the SETUP MENU Button and use the SELECT Control until the display shows either:

TIME DISPLAY

TIME REMAINING

Or

TIME DISPLAY

ELAPSED TIME

2. If desired, use the Left and Right POSITION Buttons to select the alternate menu item.
3. Press the ENTER/YES Button to confirm you selection.

'KEYBOARD TYPE'

Selects between the convenient DigiCart/II Plus MINI keyboard and conventional PC-AT keyboards. Either may be attached to the ALPHA KEYBOARD connector on the back panel.

1. Press the SETUP MENU Button and use the SELECT Control until the display shows either:

KEYBOARD TYPE

MINI

Or

KEYBOARD TYPE

STANDARD

2. If desired, use the Left and Right POSITION Buttons to select the alternate menu item.
3. Press the ENTER/YES Button to confirm your selection.

NOTE: Not all "AT" keyboards will work with DigiCart/II Plus. If you connect the keyboard (or another remote control) after power-up, press SEC and the DNET XFER button together to re-initialize the system. If the keyboard selection is incorrect, the function keys will not line up with their assigned function.

'RESTART MODE'

While one Cut or Stack is playing, you can choose other selections for playback. Restart Mode determines whether DigiCart/II Plus will discontinue playback of the current Cut and begin playback of the next selected Cut *immediately* when PLAY is pressed, or *wait* to begin playback when the current selection is completed.

1. Press the SETUP MENU Button and use the SELECT Control until the display shows either:

RESTART MODE

ON COMPLETION

or

RESTART MODE

IMMEDIATE

2. If desired, use the Left and Right POSITION Buttons to select the alternate menu item.
3. Press the ENTER/YES Button to confirm your selection.

'OVERWRITE'

Permits existing cuts to be directly overwritten in RECORD.

1. Press the SETUP MENU Button and use the SELECT Control until the display shows either:

OVERWRITE

OFF

Or

OVERWRITE

ON

2. If desired, use the Left and Right POSITION Buttons to select the alternate menu item.
3. Press the ENTER/YES Button to confirm your selection.

When OVERWRITE is ON, after pressing REC, the display will show:

X.XXXX CUT NAME

PUSH PLAY TO REPLACE

Press PLAY to record to the ID number on the top line.

If you elect to ***NOT*** OVERWRITE the targeted Cut, use the SELECT Control to choose an empty ID in the same Directory, locking out all existing Cuts or press STOP to cancel recording.

'SORT DIRECTORY BY'

Provides for sorting numerically by ID or alphabetically by NAME

1. Press the SETUP MENU Button and use the SELECT Control until the display shows either:

SORT DIRECTORY BY

INDEX

Or

SORT DIRECTORY BY

NAME

2. If desired, use the Left and Right POSITION Buttons to select the alternate menu item.
3. Press the ENTER/YES Button to confirm your selection.

'CART SPINDOWN' (TIME-OUT)

Determines if the Cart Drive will remain active and on-line or "Time-out" after 30 minutes. When set to ON, if the Drive is not accessed for 30 minutes it will *spin down* to save wear and prolong its life span. A setting of OFF causes the drive to run continuously.

1. Press the SETUP MENU Button and use the SELECT Control until the display shows either:

CART SPINDOWN

ON

Or

CART SPINDOWN

OFF

2. If desired, use the Left and Right POSITION Buttons to select the alternate menu item.
3. Press the ENTER/YES Button to confirm your selection.

NOTE: If spun down, remember to allow a few extra seconds for the Cart to spin up the next time you want to use it. You can force the cart to spin up in preparation of playback by selecting a cut or moving to the directory layer and back to the cut layer.

RECORDING TIME LIMIT

Enhances the management of available Disk space of DigiCart/II Plus and accelerates entry to the Record Ready condition when set to smaller values. Furthermore, you can start a recording and walk away knowing that after the specified time limit (+5%), the unit will stop recording.

1. Press the SETUP MENU Button and use the SELECT Control until the display shows either:

```
RECORDING
TIME LIMIT:          NONE
```

Or

```
RECORDING
TIME LIMIT:          30 SEC
```

Or

```
RECORDING
TIME LIMIT:          1 MIN
```

Or

```
RECORDING
TIME LIMIT:          5 MIN
```

Or

```
RECORDING
TIME LIMIT:          30 MIN
```

Or

```
RECORDING
TIME LIMIT:          60 MIN
```

2. If desired, use the Left and Right POSITION Buttons to select an alternate menu item.
3. Press the ENTER/YES Button to confirm you selection.

'REMOTE CONTROL'

Selects whether the rear panel Serial Port 2 (EIA-422) connector is active. When REMOTE CONTROL is set to INACTIVE, DigiCart/II Plus will not respond to remote control serial interface commands. To activate remote control, you must select an ADDRESS (1 - 32) to establish communication between DigiCart/II Plus and a host computer/automation controller connected to the port. Addresses 1 to 4 correspond to the four machine control buttons on the 360 Systems RC-220 Remote Control.

It is recommended that Remote Control remain set to INACTIVE if not in use. If you intend to use DigiCart/II Plus with an automation system that requires serial communication, consult with the vendor of that system to determine the correct setting for this function. For more details on DigiCart/II Plus 's remote control capability, refer to Chapter Two - SETUP.

1. Press the SETUP MENU Button and use the SELECT Control until the display shows either:

```
REMOTE CONTROL

INACTIVE
```

Or

```
REMOTE CONTROL

ADDRESS XX
```

2. If desired, use the Left and Right POSITION Buttons to select the desired address from 1 to 32.
3. Press the ENTER/YES Button to confirm your selection.

'THRESHOLD'

DigiCart/II Plus provides the option of recording "on audio". Upon engaging RECORD and pressing PLAY, DigiCart/II Plus will wait to TRIGGER on incoming audio at or above a pre-selected threshold. The display will show:

```
TRIGGER   -XX DB

CUT NAME        00:00:00
```

When using this mode, if the recorded Cut sounds "upcut" or pops and clicks at the beginning, reset the THRESHOLD to a lower setting and try again. In some cases, programming a short fade in will eliminate a short pop at the head of a recording, obviating the need to re-record.

1. Press the SETUP MENU Button and use the SELECT Control until the display shows either:

THRESHOLD

OFF

Or

THRESHOLD

-6dB to –60dB

2. If desired, use the Left and Right POSITION Buttons to select the alternate menu item.
3. Press the ENTER/YES Button to confirm your selection.

'THRESHOLD' RECORDING WITH A DIGITAL INPUT

Once digital recording has been initiated, DigiCart/II waits for a valid digital input before commencing. The digital signal must be present, valid and stable from the time recording commences until the recording ends. Any interruption or change will terminate the record-ready mode ("waiting for trigger threshold"); or the recording itself.

This requires sufficient lead-time on the source tape. It may be helpful to cue the source before placing DigiCart into record, or pausing a CD player before recording, rather than commencing record and then starting the CD player from a standstill.

Note that you cannot pause the DigiCart/II in record mode when using digital inputs.

The following changes to the digital input signal during recording will terminate the record process:

- Loss of the digital input signal
- Errors in the data stream
- Change in the sample rate of incoming signal
- Changes in the format of the audio data (channel status)

- Changes in copyright protection (consumer format only)

A valid digital input must have a clock at 32K, 44.1K, or 48K samples per second, and the appropriate channel status format (consumer or professional) for the selected interface type and sample rate. In addition, the data must be identified as audio in the channel status, and the validity bit must be clear for each digital sample.

It is recommended that the analog input be selected or input monitor be turned off whenever the digital inputs are not being used.

UTILITY MENU OPERATIONS

The UTILITY MENU contains functions relating to management of Drives, Directories, Cuts, Stacks (stored Playlists) and Zip Disks. Menu items include:

CHANGE NAME	COPY EDITED	CLEAR PRESET
ERASE	RENUMBER DISK	FORMAT DISK
COPY ORIGINAL	ASSIGN PRESET	UPDATE DIRECTORIES

This section describes how to rename Drives, Directories, Stacks or Cuts; and how to ERASE Cuts, Directories and Stacks or COPY them to different Directories and Drives. Also explained are the procedures for Formatting and Renumbering Zip Disks for use with DigiCart/II Plus.

To Begin

1. Locate the Drive, Directory, Cut or Stack to be used.
2. Press the UTILITY MENU Button to enter the menu.
3. Use the SELECT Control to view menu options.
4. Follow the screen prompt to activate an option.
5. Press the CANCEL/NO, STOP or PLAY Button to exit the Utility Menu.

'CHANGE NAME'

In addition to the I.D. numbers automatically provided by DigiCart/II Plus, each Drive, Directory, Cut or Stack may have its own NAME containing up to 15 characters. You may use letters, numbers and "space" or "–".

1. Rotate the SELECT Control to choose the Drive, Directory, Cut or Stack you want to rename.
2. Press the UTILITY MENU Button. (It will illuminate when pressed) The display will show:

3. Press the ENTER/YES Button to continue.

   A cursor will blink on the first character of the NAME to be changed.

4. Turn the SELECT Control to choose a letter or number. Use the Left and Right POSITION Buttons to move to the next character.

With a little practice, you will find it quite easy to write NAMES by using your left thumb to dial the SELECT knob and your right thumb or finger to move the cursor. Users working with large libraries of cuts will find the RC-205 MINI keyboard a "must".

'ERASE'

ERASE permanently deletes the currently selected Cut, Stack, Directory or Disk. Once something has been ERASED, you will not be able to "recover" it. A copied Cut with the same name, located in other Drives, Directories or Stacks will not be affected. A copied Directory or Stack will have a different ID and will not be erased.

1. Navigate to the Cut, Directory or Drive you want to erase.

2. Press the UTILITY MENU Button and rotate the SELECT Control until the display shows:

```
ERASE

PRESS ENTER / CANCEL
```

3. Press the ENTER/YES Button. The display will show either:

```
X.XXXX          CUT NAME

PRESS YES TO ERASE
```

Or

```
X.XXXX     DIRECTORY NAME

ERASE DIRECTORY?
```

Or

```
X.XXXX          CUT NAME

ERASE ENTIRE DISK?
```

Make sure that the ID and name appearing in the top line of the display is what you intend to ERASE.

4. Press the ENTER/YES Button to ERASE the selected item. Press the CANCEL/NO Button to exit this function without ERASING the selected Item

For each Cut that is erased, the display will briefly show:

```
ERASING

ID                NAME
```

You can cancel an erase procedure in progress by pressing the CANCEL/NO button.

'COPY'

DigiCart/II Plus provides the flexible ability to copy the contents of Drives, Directories, Cuts and Stacks to any location of the same type. This feature can be an important time-saver because grouped materials can be mass-copied. Often you will need two or more almost identical Stacks with only one or two Items that are different. A Stack can be copied and then quickly edited to change those Cuts. The copies are easily renamed to avoid confusion.

CAUTION

If you COPY to an occupied destination the contents at that destination will be replaced. Always take a moment to be sure of what will happen when using COPY.

'COPY ORIGINAL' — Copying a Cut

Copies the entire contents of the current Cut from its original location to any other location.

1. Navigate to the Cut you wish to copy (source Cut).
2. Press the Utility Menu Button and rotate the Select Control until the display shows:

```
COPY ORIGINAL

PRESS ENTER /CANCEL
```

3. Press the ENTER/YES Button. The display will show:

```
X.XXXX          CUT NAME

   SELECT DESTINATION
```

4. If necessary, use the POSITION Buttons and the SELECT Control to select a different destination Directory.

5. Press the Right POSITION Button. If the directory is empty, Press the ENTER/YES Button. The display will show:

```
TARGET ID

SELECT NEW INDEX #
```

6. If the diectory is not empty, use the SELECT Control to view the existing contents of the directory or select a particular cut to be replaced.

7. Press the ENTER/YES Button. The display will show:

```
   TARGET ID

   REPLACE OR SELECT #
```

8a. <u>To replace the selected Cut</u>: Press the ENTER/YES Button. The display will briefly flash:

```
          COPYING

TARGET ID        NEW NAME
```

Or

```
          REPLACING

TARGET ID        CUT NAME
```

When the copy procedure is completed, DigiCart/II Plus displays:

```
X.XXXX              NEW NAME

HH:MM:SS  48K          AC-2
```

8b. To copy to an unused Index number: Rotate the SELECT Control to lock out access to existing Cuts. The display will Show:

```
X.XXXX

     SELECT NEW INDEX #
```

Only unoccupied IDs will be shown.

9. Press ENTER/YES to COPY. The display will briefly flash:

```
            COPYING

TARGET ID           NEW NAME
```

When the copy procedure is completed, DigiCart/II Plus displays:

```
X.XXXX              NEW NAME

HH:MM:SS            48K  AC-2
```

'COPY ORIGINAL' — *Copying a Stack*

DigiCart/II Plus handles Stacks in the same manner as Cuts. Use the same COPY ORIGINAL procedures as for Cuts. Original Stacks may only be Copied to other Numbers in the Stack Directory.

NOTE: While stacks can be copied from one drive to another, they still reference the index numbers of the Cuts they contain. Therefore, if you copy a Stack to a Zip Cartridge, it will play correctly only in the unit in which it was made or in another unit that contains the same material in the same index locations. Copying the Stack to a cut on the Cartridge avoids this problem. See "Copy Edited - Copying a Stack."

'COPY ORIGINAL' — Copying a Directory

Duplicates Cuts in a source Directory to any destination Directory.

1. Select a directory as the source. You MUST be in the Directory Layer and not the Cut Layer to do this.
2. Press the UTILITY Button and rotate the Select Control until the display shows:

```
COPY ORIGINAL

PRESS ENTER / CANCEL
```

3. Press the ENTER/YES Button. The display will then prompt with the current Directory ID and NAME the top line:

```
X.X          DIRECTORY NAME

SELECT   DEST.  DIR
```

4. Use the SELECT Control and the Left and Right POSITION Buttons to select the destination Directory.
5. Press the ENTER/YES Button. The display prompts:

```
X.X          DESTINATION NAME

REPLACE DUPL INDEX?
```

6. If you answer NO, the Cuts in the source Directory will copy to the same Index Number in the destination Directory unless that Index is occupied. If an Index Number is occupied, the Cut will be copied to the next open Index Number.

   If you answer YES, the Cuts in the source Directory will replace any Cut in the destination Directory that has the same Index Number (the last three digits of the I.D. Number).
7. Press either the ENTER/YES or CANCEL/NO Button. The display prompts:

```
X.X          DESTINATION NAME

REPLACE DUPL NAME?
```

If you answer NO, all Cuts in source Directory will be copied to the Destination Directory, leaving all cuts in the destination Directory in place (Subject to your choice for Replace Duplicate Index.)

If you answer YES, any cuts from the source Directory that have names that duplicate a cut name in the destination Directory, will replace those in the destination Directory.

If you answer NO to both ID and NAME, DigiCart/II Plus will copy to the chosen Directory, starting with the lowest available ID number.

NOTE: Copying begins immediately when both questions are answered, starting from the selected cut.

DigiCart/II Plus will Copy all Cuts from the original Directory, to the Destination Directory. The display will indicate the name of each Cut and its position in the Directory as it is copied. Copying begins with the currently selected Cut in the source Directory.

The display will show:

```
COPYING

SOURCE ID   SOURCE NAME
```

If a Cut of the same name already exists in the destination Directory, and you have answered Yes to the REPLACE DUPL NAME prompt, DigiCart/II Plus will copy over it.

The display will indicate:

```
REPLACING

SOURCE ID   SOURCE NAME
```

You may elect to copy less than the entire Directory.

7. When the name of the *last* Cut you want to copy appears in the bottom line of the display, press CANCEL/NO.

   DigiCart/II Plus will stop the Copy Directory procedure and return to Directory Select mode.

'COPY EDITED' — Copying a Cut

Copies the *edited* version of a Cut from its original location to a new one. The Copy will include only the audio information between the HEAD and TAIL pointers; the trimmed HEAD and TAIL sections will be

deleted. (See *EDIT MENU OPERATION* later in this Chapter.) The procedures are the same as for COPY ORIGINAL, however select COPY EDITED from the UTILITY MENU.

An edited Cut may be Copied to a different Number in the same Directory and the original Cut ERASED to save space. Once vacant, the edited Cut may be Copied back to the original Number, if desired. This avoids the need to update logs. When the original has been deleted, the edited Copy becomes a new original.

'COPY EDITED' — Copying a Stack

DigiCart/II Plus handles Stacks in the same manner as Cuts. Use the same COPY EDITED procedures as for Cuts. Stacks may only be copied to other ID Numbers in the same Stack Directory or to a Stack Directory on another Drive.

NOTE: While stacks can be copied from one drive to another, they still reference the index numbers of the Cuts they contain. Therefore, if you copy a Stack to a Zip Cartridge, it will play correctly only in the unit in which it was made or in another unit that contains the same material in the same index locations. Converting the Stack to a cut on the Cartridge, as detailed below, avoids this problem.

You may also convert a **Linear** Stack to a Cut using COPY EDITED. The new Cut *will* occupy Disk space. HEAD and TAIL Trims will be copied, FADE IN and OUTPUT GAIN settings will be those of the first Cut. FADE OUT will be that of the last Cut. (See Chapter Four).

'COPY EDITED' — Copying a Directory

Copies the edited versions of all Cuts from their original locations. Cuts that have not been edited also will be Copied. This helps to conserve Disk space by copying only the essential portion of each Cut. The procedures are the same as for COPY ORIGINAL, however select COPY EDITED from the UTILITY MENU.

'RENUMBER DISK'

Allows you to number Disks for identification purposes. Press and hold the STOP button to view a Disk's Number and NAME (if labeled). Once a Disk has been assigned a number, it will retain that number until this function is used to change it.

1. Press the ENTER/YES Button. The display will prompt:

A cursor will blink on the first number.

2. Use the SELECT Control and Left and Right POSITION Buttons to choose a new number.

3. Press the ENTER/YES Button to confirm your selection.

'ASSIGN PRESET'

Lets you assign a Cut or Linear Stack to a single "Hot Key" on a DigiCart/II Plus Remote Control or to the letter keys of an alphanumeric keyboard. When assigned, the selection will PLAY immediately with a single keystroke.

- Cuts assigned to PRESETS may be Dolby AC-2 or Linear format. The maximum number of Linear cuts is 16.
- PRESETS must be Cuts on a Hard Disk Drive. (Not ID 0.XXXX or 6.XXXX)
- PRESETS are subject to the currently selected RESTART MODE. (*i.e.,* IMMEDIATE or ON COMPLETION).
- Contents of a Directory may be mass assigned to PRESETS by entering the UTILITY MENU'S ASSIGN PRESET from the DIRECTORY Layer.

  PRESET 1 = 1 on the RC-210/220 or A on the alphanumeric keyboard.

  PRESET 2 = 2 on the RC-210/220 or B on the alphanumeric keyboard, etc.
- The alphanumeric keyboard's Scroll Lock must be ON for it to ASSIGN or PLAY PRESETS. Scroll Lock may be ON or OFF to CLEAR PRESETS.
- It is *not* necessary to Clear a PRESET before reassigning it.

Assigning a single PRESET using the RC-205; or RC-210/220 (method 1):

1. Press the Utility Menu Button and rotate the Select Control Until the display will shows:

2. Press the ENTER Button. The display will show:

```
PRESET          0          A

UNASSIGNED
```

2. Press (turn ON) the RC-205's Scroll Lock.
3. Use the SELECT Control to choose the RC-205 alphabet or compound-alpha key (i.e.: SHIFT A, CONTROL B, ALT X etc.) , or RC-220's white Hot Key number for the PRESET.
4. Press the ENTER/YES Button. The selected Item is now assigned to the key. Press the key to play it.

Assigning a Single PRESET using the RC-210, or RC-220 (method 2)

1. Press ASSIGN PRESET. The display will show:

```
X.XXXX              CUT NAME

SELECT PRESET
```

2. Use the Left and Right POSITION Buttons and SELECT buttons or FIND operation to choose a Cut or Linear Stack.
3. Press the white PRESET key to be assigned.

   The bottom line of the display will briefly flash:

```

PRESET  XX  ID NUMBER
```

   Repeat as needed for other assignments,

4. Press the CANCEL/NO Button to exit. The selected Item is now assigned. Press the key to play it.

Assigning Multiple PRESETS on the RC-205 and RC-210, or RC-220

1. Use the Left and Right POSITION Buttons and SELECT buttons to determine the *first* Cut or Linear Stack you wish to assign.
2. Press the Left POSITION Button to go to the DIRECTORY Layer.
3. Press the UTILITY MENU Button and select ASSIGN PRESET.
4. Press the ENTER/YES Button.

3. Turn ON the RC-205's Scroll Lock. The display will show:

```
PRESET    0          A

          UNASSIGNED
```

5. Use SELECT Buttons to choose the Hot Key number or alphabet letter for the PRESET where the assignment is to begin.

6. Press the ENTER/YES Button.

Assignment will continue until all Sources are assigned or all available Destinations are filled. Assignment continues to the end of your sort sequence and does *not* wrap around to continue at the beginning.

The following table shows the general relationship of Index and PRESET Addresses for mass assignment of PRESETS beginning at ID 000.

CUT INDEX	ALPHA KEY	HOT KEY
000 - 015	A - P	1-16
016 - 025	Q - Z	
026 - 051	Shift A-Z	
052 - 077	Alt A-Z	
078 - 103	Crtl A-Z	

VIEWING PRESETS using the RC-205, RC-210 or RC-220

1. Press the UTILITY MENU Button. Select ASSIGN PRESET or CLEAR PRESET.

2. Press the ENTER/YES Button.

3. Use SELECT to scan PRESETS. The lower line of the display will show ID and NAME (if labeled) of assigned Items.

4. Press the CANCEL/NO Button to exit.

PLAYING PRESETS

The RC-205's Scroll Lock must be ON to Play PRESETS.

1a. Press the RC-205 alpha or compound-alpha key to Play a PRESET.

1b. Press a white PRESET key on the RC-210/220.

NOTE: The SETUP MENU'S RESTART MODE - IMMEDIATE or ON COMPLETION affects the playing of PRESETS.

'CLEAR PRESET'

Removes a selection from a Hot Key.

- RC-205's Scroll Lock may be ON or OFF.
- RC-210 permits Clearing of a PRESET *only* by reassigning it.
- RC-220 allows CLEAR PRESET *and* reassignment.

1. Press UTILITY MENU and select CLEAR PRESET.
2. Use SELECT to determine the PRESET you want to delete.
3. Press ENTER to CLEAR the PRESET.

NOTE: You may CLEAR multiple PRESETS in the current Directory by entering the CLEAR PRESET mode from the DIRECTORY Layer. Clearing begins with the PRESET number shown on the display. CANCEL terminates Clearing after the currently displayed Selection.

'FORMAT DISK'

Prepares either a removable Zip Disk or a fixed hard Disk for use as a DigiCart/II Plus Drive. It will erase all existing Cuts and Stacks from a previously formatted Disk. If you intend to format a Zip Disk, it must be inserted in the Zip Disk Drive *before* beginning the Format procedure.

NOTE: Zip Disks purchased from computer stores may also be formatted for use as DigiCart/II Plus Carts. These must be Iomega Zip 100 Cartridges.

1. Press the ENTER/YES Button. The display will prompt:

```
SELECT DRIVE

DISK 0: (CARTRIDGE)
```

2. Rotate the SELECT Control to choose the Drive you want to format. DigiCart/II Plus will indicate the following options:

DISK 0	INTERNAL Zip DRIVE
DISK 1	INTERNAL HARD DISK
DISK 2	OPTIONAL SECOND INTERNAL HARD DISK OR EXTERNAL HARD DISK
DISK 3	EXTERNAL HARD DISK
DISK 4	EXTERNAL HARD DISK
DISK 5	EXTERNAL HARD DISK
DISK 6	EXTERNAL Zip DRIVE OR EXTERNAL HARD DISK

3. Press the ENTER/YES button to confirm a selection. The display prompts:

```
PRESS YES TO ERASE

DIGICART DISK
```

4. Press ENTER/YES to continue. The display will prompt:

```
CANCEL FORMAT?

YES / NO
```

5. If you press CANCEL/NO, the display will indicate:

```
FORMATTING DISK

PLEASE WAIT
```

When Formatting is complete, DigiCart/II Plus will exit the UTILITY MENU.

'UPDATE DIRECTORIES'

This feature allows the user to force the creation of or update the summary file for the Directory or all Directories if performed from the Drive layer. Originally, this feature was included to facilitate the transfer of material between DigiCart with different versions of software. In some cases it may restore a disk that appears to have lost a Cut or exhibits other problems. When importing material from a 360 Systems Short/Cut, this operation will accelerate the disk initialization process.

WARNING!

When this feature is used at the Drive level, it will update all 10 Cut Directories, and it will open and close each file on the Disk. If the Disk has many cuts, the update procedure can be protracted.

EDIT MENU OPERATIONS

Edit Menu functions of DigiCart II Plus are non-destructive and can be undone or changed at any time. These are basic editing tools that allow you to change the playback of a recorded Cut by placing *pointers (markers)* in the file. Pointers are stored as part of a Cut and remain active until changed or removed. Edit Menu features include:

HEAD (TRIM)	FADE IN	OUTPUT GAIN
TAIL (TRIM)	FADE OUT	PRE-ROLL

Most Edit Menu functions are time-based. By adjusting HEAD and TAIL trim, you determine the total playing time of a Cut. Audio gain will ramp up or down according to the times selected for FADE IN and FADE OUT. PRE-ROLL is provided so you can preview TAIL trim and FADE OUT edits without having to play an entire Cut. It sets the length of time that a Cut will play just prior to a TAIL trim or FADE OUT when auditioning selected values. Times are displayed in HH:MM:SS:FF.BB (Hours, Minutes, Seconds, Frames and SMPTE Bits).

Output Gain is the only Edit Menu function that is not time based. The Output Gain for each Cut is adjustable over a 96 dB range. The scroll rate for Output Gain may be selected for decibels, or tenths of a decibel.

You can use the Copy Edited Cut feature in the Utility Menu to create a new Cut that contains only the audio material between the HEAD and TAIL pointers. By deleting the original Cut, you then free up recording time on a Drive by eliminating the audio material that is no longer needed.

'HEAD'

Determines the point in a Cut where play begins when the PLAY button is pressed.

In addition to its function as an editing tool, Head Trim allows auditioning of any part of a file by selecting the desired start time. Pressing CANCEL/NO when done restores any programmed Head Trim value or 00:00:00:00.

Press the EDIT MENU button and rotate the SELECT Control to HEAD. The display will show the current HEAD pointer for the Cut:

NOTE: DigiCart/II Plus has a minimum length of about two seconds for any Cut. It is not possible to use HEAD trim to further reduce this length. Since tight HEAD trims are usually more important than TAIL trims, always perform the HEAD trim first, and then trim the TAIL if Cut length permits.

'HEAD' — *Pressing Play*

Lets you listen to audio when setting a new HEAD pointer.

1. Press PLAY.

The Cut will begin playing from 00:00:00:00.00.

2. Press STOP to set the new HEAD pointer.

After pressing the STOP Button, the display will show the previous HEAD point on the top line, and the newly selected HEAD point on the bottom line.

```
HEAD        00:00:00:00

00:00:01:25.00 <F>
```

3. Use POSITION Arrows to set the scroll value in brackets as <H> = Hours, <M> = Minutes, <S> = Seconds, <F> = Frames or <B> = Bits.
4. Use SELECT to fine-tune the HEAD point.
5. Press PLAY to audition the new HEAD point. Repeat steps 5 and 6 as needed.
6. Press ENTER/YES to save the new HEAD pointer, or CANCEL/NO to exit with no change.

'HEAD' — *Pressing Stop*

To immediately begin editing the Head Trim without listening to audio:

1. Press STOP. The current HEAD point will be indicated on both top and bottom lines.

```
HEAD        00:00:00:00

00:00:00:00.00 <F>
```

2. Use POSITION Arrows to set the scroll value in brackets as <H> = Hours, <M> = Minutes, <S> = Seconds, <F> = Frames or <B> = Bits.
3. Use SELECT to fine-tune the HEAD point.

4. Press PLAY to audition the new HEAD point.

   Repeat steps 3 and 4 as needed.

5. Press ENTER/YES to save, or CANCEL/NO to exit with no change.

NOTE: Because DigiCart/II Plus must pre-load audio for the new HEAD point, there may be a short delay the first time you press PLAY to audition a new HEAD pointer. Pressing PLAY a second time will start the Cut immediately from the selected HEAD point.

'TAIL'

TAIL Determines the point in the selected Cut where play ends. DigiCart/II Plus limits selection to a minimum length of about two seconds. Therefore, the TAIL point cannot be set earlier than about 2 seconds after the HEAD point.

When setting a new TAIL point in a Cut that contains FADE IN and/or FADE OUT information, DigiCart/II Plus will not allow you to set the TAIL pointer to less than the combined total of FADE IN and FADE OUT times. (For more information, refer to FADE IN and FADE OUT later in this section.)

Press EDIT MENU and rotate SELECT to TAIL. The display will show the current TAIL point of the Cut:

```
TAIL  00:00:30:00

PRESS PLAY OR STOP
```

'TAIL' — *Pressing Play*

To audition a Cut when setting set a new TAIL pointer:

1. Press PLAY. The Cut will begin playing from 00:00:00:00.00, or the current HEAD pointer.

2. Press STOP to mark the new TAIL pointer position.

The display will show the previous TAIL point on the top line, and the newly selected TAIL point on the bottom line:

```
TAIL  00:00:30:00

00:00:29:15:45 <F>
```

3. Use POSITION Arrows to set the scroll value in brackets as

   <H> = Hours, <M> = Minutes, <S> = Seconds, <F> = Frames or <B> = Bits.

4. Use SELECT to fine-tune the TAIL point.
5. Press PLAY to audition the new TAIL pointer. DigiCart/II Plus will begin playback of the Cut according to the currently selected PRE-ROLL length (see PRE-ROLL below). Repeat steps 4 and 5 as needed.
6. Press ENTER/YES to save, or CANCEL/NO to exit leaving the original TAIL point intact.

'TAIL' — *Pressing Stop*

To immediately begin editing the TAIL trim without listening to audio:

1. Press STOP. The display will show the current TAIL point on both top and bottom lines.

```
TAIL  00:00:30:00

00:00:30:00:00 <F>
```

2. Use POSITION Buttons to set the scroll value in brackets as <H> = Hours, <M> = Minutes, <S> = Seconds, <F> = Frames or <B> = Bits.
3. Use SELECT to fine-tune the TAIL point.
4. Press PLAY to audition the new TAIL point. Repeat steps 3 and 4 as needed.
5. Press ENTER/YES to save, or CANCEL/NO to exit.

'PRE-ROLL'

When editing a TAIL trim or fade out, you need to hear a PRE-ROLL to locate the correct trim location. Depending upon the nature of the Cut, or its total length, you may want to vary the length of the PRE-ROLL. If the PRE-ROLL length exceeds duration of the Cut it will be ignored and the entire Cut will play. PRE-ROLL also lets you back-time a Cut without the need to cue-in from the beginning.

1. Press the EDIT MENU button and rotate the SELECT knob to PRE-ROLL. The display will prompt:

```
PRE-ROLL  00:00:04:00

PRESS PLAY OR STOP
```

2. Press *either* PLAY or STOP. The display will prompt:

```
PRE-ROLL  00:00:04:00

00:00:04:00:00 <F>
```

3. Use POSITION Arrows to set the scroll value in brackets as <H> = Hours, <M> = Minutes, <S> = Seconds, <F> = Frames or <B> = Bits.
4. Use SELECT to choose a new PRE-ROLL length.
5. Press ENTER/YES to save or CANCEL/NO to exit.

'FADE IN'

After you have recorded a Cut, you can program a FADE IN. FADE IN always begins at the HEAD point of a Cut, and cannot exceed total Cut length or the amount of time between the HEAD point and the beginning of a FADE OUT. The maximum FADE length is 40 seconds.

NOTE: Do not press PAUSE during the FADE IN period of the Cut's playback. When PAUSE is released, the FADE IN will start over from silence.

'FADE IN' — *Pressing Play*

To set FADE IN length while listening to audio, select the FADE IN option in the Edit Menu, then:

1. Press PLAY. The Cut will begin playback. You will not hear the FADE IN at this time.
2. Press STOP to set the end point of the FADE IN. The display will show the previous FADE IN time on the top line, and the newly selected FADE IN time on the bottom line:

```
FADE IN          00:00:04:00

00:00:04:00:00 <F>
```

3. Use POSITION Arrows to set the scroll value in brackets as <H> = Hours, <M> = Minutes, <S> = Seconds, <F> = Frames or <B> = Bits.
4. Use SELECT to fine-tune the FADE IN length.
5. Press PLAY to audition the new FADE IN.

DigiCart/II Plus will play the Cut from the HEAD point and will continue playback until the Cut ends, or you press STOP.

Repeat steps 4 and 5 as necessary.

6. Press ENTER/YES to save changes, or CANCEL/NO to exit.

'FADE IN' – Pressing Stop

To immediately set the FADE IN length without playback, select the FADE IN option in the Edit Menu, then:

1. Press the STOP Button. The display will show the current FADE IN time on both lines:

```
FADE IN      00:00:00:00

00:00:00:00:00 <F>
```

2. Use POSITION Arrows to set the scroll value in brackets

   <H> = Hours, <M> = Minutes, <S> = Seconds, <F> = Frames or <B> = Bits.

3. Use SELECT to fine-tune the FADE IN length.
4. Press PLAY to audition the FADE IN.

DigiCart/II Plus will play the Cut from the HEAD point and will continue playback until the Cut ends, or you press STOP.

Repeat steps 3 and 4 as necessary.

5. Press ENTER/YES to save changes, or CANCEL/NO to exit.

'FADE OUT'

After you have recorded a Cut, you can program a FADE OUT length. The fade always ends at the TAIL point of the Cut, and cannot exceed total Cut duration. DigiCart/II Plus limits FADE OUT length to the time between the end of a FADE IN (if used, otherwise the HEAD point), and the TAIL point of a Cut. The maximum FADE length is 40 seconds.

NOTE: When adjusting FADE OUT, time is measured as the number of seconds from

the TAIL point to the start of the FADE.
No FADE OUT = 00:00:00:00:00.

'FADE OUT' — *Pressing Play*

To set the FADE OUT length while listening to audio:

1. Press PLAY. The Cut will play back and the counter will count down.

2. Press STOP to set the beginning point of the FADE OUT.

   The display will show the previous FADE OUT duration on the top line, and the newly selected FADE OUT length on the bottom line:

```
FADE OUT   00:00:00:00

00:00:04:28:56 <F>
```

3. Use Left and Right POSITION Buttons to set the scroll value in brackets as

   <H> = Hours, <M> = Minutes, <S> = Seconds, <F> = Frames or <B> = Bits.

4. Use SELECT to fine-tune FADE OUT length.

5. Press PLAY to audition the new FADE OUT.

   DigiCart/II Plus will play the Cut from the PRE-ROLL point to the TAIL point or until you press STOP.

   Repeat steps 4 and 5 as necessary.

6. Press the ENTER/YES Button to save changes, or CANCEL/NO to exit.

'FADE OUT' — *Pressing Stop*

To immediately set the FADE OUT length without hearing audio:

1. Press the STOP Button. The display will show the current FADE OUT length on both lines:

```
FADE OUT   00:00:00:00

00:00:00:00:00 <F>
```

2. Use the Left and Right POSITION Buttons to set the scroll value in brackets as

   <H> = Hours, <M> = Minutes, <S> = Seconds, <F> = Frames or <B> = Bits.

3. Use SELECT to fine-tune the FADE OUT length.

4. Press the PLAY Button to audition the new FADE OUT.

   DigiCart/II Plus will play the Cut from the PRE-ROLL point to the TAIL point or until you press STOP. Repeat steps 3 and 4 as necessary.

Press ENTER/YES to save changes, or CANCEL/NO to exit.

'OUTPUT GAIN'

Allows you to adjust the Output Gain (level) of a Cut *after* it has been recorded. Gain may be adjusted over a range of +6 dB to -90 dB, referenced to the initially recorded level.

Just as with all other Edit Menu functions, this function is non-destructive and the gain setting is stored as part of a Cut's header. DigiCart/II Plus will read the header to configure itself for playback.

1. Press the STOP *or* PLAY button. The display will show the current gain setting for the Cut relative to the originally recorded level.

```
OUTPUT GAIN          0.0dB

PRESS PLAY OR STOP
```

2. Use the Left and Right POSITION Buttons to set the scroll value for decibels (<1.0>) or tenths of decibels (<0.1>).
3. Use the SELECT Control to adjust Output Gain.
4. Press the ENTER/YES Button to save changes or CANCEL/NO to exit.

FIND OPERATIONS

By using the alphanumeric keyboard, you can instantly Find any Cut by Name or ID. RC-210/220 users can Find Cuts or Stacks by ID number. Cuts in the current directory only require entry of their Cut number or Name. (However, a search by name will search all Directories.) You may also Find them by typing only as much of their Name as makes them unique. For example: If there is a cut Named "BOSTON" and another Named "BOND", BOS <ENTER> will Find the first and BON <ENTER> will find the other. This search progresses from the currently selected Cut, so if there are more than one Cut with the same or similar names, subsequent FIND operations will find each one in turn.

NOTE: For Cuts in other Directories, use the full four-number Identifier. "S" indicated the Stack Directory. For Cuts on other Drives, use the full five-number Identifier. The " . " separator is not needed with the FIND function.

Find can be used in the process of creating a QuickStack. Please see Chapter 4 –STACKS.

Using the FIND Mode

RC-205

1. Press the RC-205's FIND (F5) key. The display will show:

```
FIND          (BLINKING CURSOR)

 HH:MM:SS  48K          AC-2
```

Information on the bottom line pertains to the currently selected Cut. Use the alpha or number keys to select Cut. Use the S Key when finding I.D. Numbers in the Stack Directory.

RC-210/220

1. Press a sequence of gray number keys on the RC-210/220 keypad. The RC display will show:

```
FIND CUT (NUMBERS PRESSED)

 HH:MM:SS  48K          AC-2
```

The information on the bottom line pertains to the currently selected Cut.

2. Press the ENTER Button.

The screen will display information about the newly selected Cut.

3. Press PLAY to Play the Cut or enter it into a Stack (see *QuickStack* in the next Chapter) Repeat as necessary for Follow-On Play.

The RC-210/220 STACK DIR Key

Find Operations on the RC-210/220 are expedited by use of the STACK DIR key. Instead of using the SELECT and POSITION Arrows to move to the Stack Directory, you may Find a Stack as follows:

1. Press STACK DIR. The screen will show:

```
FIND STACK                    S

 HH:MM:SS  48K            AC-2
```

Information on the bottom line pertains to the currently selected Cut.

2. Press the gray number keys for the desired Stack. The screen will show:

```
FIND STACK .S (NUMBERS PRESSED)

 HH:MM:SS  48K            AC-2
```

3. Press ENTER. The screen will show information about the newly selected Stack.
4. Press PLAY to Play the Stack or enter it into a Compound Stack (See Chapter Four: STACK MODE). Repeat as necessary for Follow-On Play.

OPERATION OF THE ZIP DISK DRIVE

FRONT PANEL

The amber LED on the front panel of the ZIP Drive indicates Zip Drive activity. The LED does not illuminate unless the media is accessed. The following table enumerates the various LED indications.

Zip DRIVE LED INDICATIONS

Function	LED Indication
Power ON Diagnostics	Short Blink
No Disk Inserted	Off
Disk Inserted	Off
Disk is Turning	Off
Accessing Disk	Irregular Blink
Diagnostics Error	Slow Blink
Sleep Mode	Off
Lock Mode	Off
Drive Stalled	Slow Blink
Surface Certification Format	Irregular Blink

HANDLING ZIP DISKS

Although the plastic shell protects the data surface from most accidental damage, the following rules **MUST** be observed:

DO remove the Disk in the Drive after use. Return it to its protective case to prevent damage from dirt and spills.

DO NOT manually open the access door on the Disk Drive.

DO NOT open the Disk when it is outside the Drive.

DO NOT insert objects into the Disk .

DO NOT handle the front edge of the Disk. Oils can be transferred from hands to the media surface.

DO NOT transport the Drive with the Disk inserted. If the Drive is to be moved with the power off, the Disk must be removed before turnoff.

DO NOT leave a Disk partially inserted in the Drive. This increases the possibility of damaging the Disk or the Drive.

DO NOT put a Disk near a loudspeaker, transformer, telephone or electric motor.

DO NOT expose Disks to direct sunlight or moisture.

DO NOT expose Disks to magnetic fields greater than 30 Gauss.

DO NOT store Disks at temperatures above 125° F (50° C).

Zip DISK LOADING

Note: The power on your DigiCart/II Plus must be on to enable normal disk loading and unloading.

The access door on the Zip Disk Drive opens inward when a Disk is inserted. Zip Disks are inserted shutter-end first, label side up. During insertion, the shutter slides open to allow the heads access to the two data surfaces. When loaded, the Disk is locked in the Drive.

Note: If the Disk is difficult to insert, check its orientation and try again. **DO NOT FORCE THE DISK INTO THE DRIVE**. Objects inserted into the front of the Drive may damage it. Such action will void the manufacturer's warranty.

Zip DISK REMOVAL

1. Allow the Zip Disk Drive to complete servicing the command requiring Disk access. If desired, press STOP.
2. When the Disk has stopped, the Disk lock/eject mechanism will disengage.
3. Eject the Disk by pressing the eject button.

NOTE: During certain operations, Zip Disk ejection is disabled by the DigiCart/II Plus software. The DigiCart/II Plus "remembers" attempts to eject the disk and defers ejection until it is enabled by the software.

Zip DISK REMOVAL AFTER A POWER FAILURE

If a Zip Disk becomes locked in a drive because of power failure, the following procedure should permit cartridge removal:

CAUTION! Disconnect power from the DigiCart/II Plus prior to manual Disk removal. This MUST be done to guard against the possibility of power restoration during manual Disk removal.

1. Hook the end of a paperclip on the wire loop in the upper left corner of the Zip drive face panel. Gently pull the wire loop straight out until the Disk is ejected.
2. Gently push the wire loop back into place with a finger to reset the mechanism.

CAUTION! If the removal procedure does not eject the Disk, repeat the procedure. Do NOT try to forcibly remove the Disk.

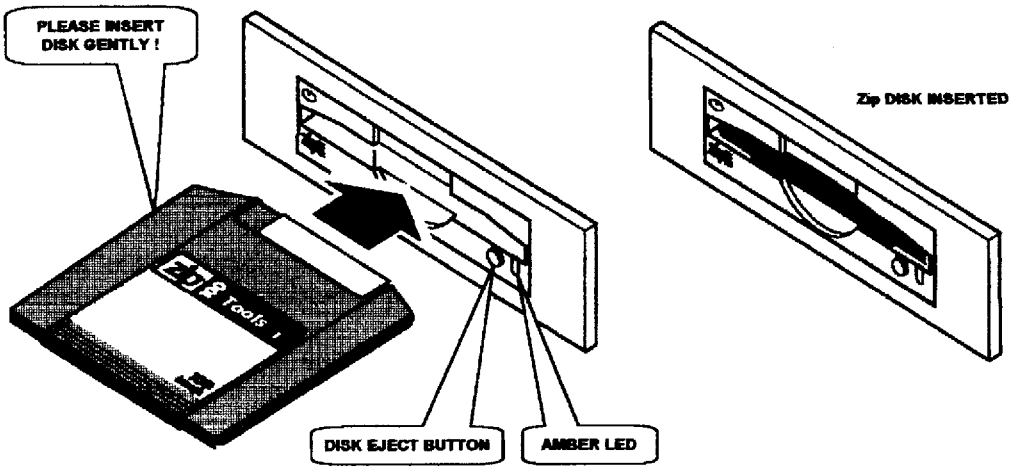

Figure 1. Zip Disk Loading

FORMATTING A ZIP DISK

New Zip 100 Disks must be formatted before they can be used with DigiCart/II Plus. Use care when formatting to select the correct Drive; formatting is an irreversible process and ***destroys all previous data*** on the Disk or Drive.

NOTE: The Zip Tools Disk that comes with external Zip Drives cannot be formatted in a DigiCart/II Plus.

To Format a Disk:

1. Insert the Disk into the Zip Drive on your DigiCart/II Plus.
2. Press the UTILITY MENU button.
3. Rotate the SELECT Control until the display reads:

```
FORMAT DISK

PRESS ENTER /CANCEL
```

4. Press the ENTER/YES Button. The display will show:

```
SELECT DRIVE

DISK O (ZIP DRIVE)
```

5. Rotate the SELECT Control to choose the Drive to be Formatted.

6. Press the ENTER/YES Button. The display prompts:

```
PRESS YES TO ERASE

DIGICART DISK
```

7. Press ENTER/YES. The display shows:

```
CANCEL FORMAT?

YES / NO
```

8. Press CANCEL/NO to continue. The displays shows:

```
FORMATTING DISK

PLEASE WAIT
```

9. When the FORMAT process is complete, DigiCart/II Plus will exit the Utility Menu.

   Upon inserting a previously formatted Disk, the Yellow LED will flash as the Drive reads initialization information. The display will read:

```
INITIALIZING

DISK 0 (ZIP DRIVE)
```

NOTES: Should the Disk fail to initialize correctly, an error condition exists. Remove and reinsert the Disk. If this does not correct the problem, the media may require reformatting or the Drive may require service.

NEVER bulk erase a DigiCart/II Plus Disk. This will destroy the special formatting on the Disk, rendering it useless. Bulk erased Disks cannot be reformatted and must be discarded.

USING AN EXTERNAL ZIP DRIVE

Your DigiCart/II Plus will support an external Zip Drive. This can be a Model D-ZIP-DRV-E from 360 Systems or a SCSI Zip Drive you procured from other sources.

CONNECTING TO AN EXTERNAL ZIP DRIVE

THE 25 PIN FEMALE "D" CONNECTOR (SEE CHAPTER 2, FIGURE 2 REF. 8) ON YOUR DIGICART/II PLUS IS NOT A SCSI INTERFACE.

IT IS FOR REMOTE CONTROL ONLY.

CONNECTING A SCSI DEVICE TO THIS CONNECTOR WILL SEVERELY DAMAGE THE SCSI DEVICE.

NOTE: The SCSI connector on your DigiCart/II Plus is a Centronics® 50 Pin Connector (Figure 2. Reference 5) and may have to be adapted to interface with a 25 Pin "D" connector common to SCSI devices.

NOTE: If your Zip Drive is doing double duty with a computer and your DigiCart/II Plus, remember the formatting between the two platforms is not compatible and the Zip Disks will NOT be interchangeable. A Zip Disk formatted for use with your DigiCart/II Plus will not work in your PC and vice versa. See "Formatting a Zip Disk" on Page 51 of this Chapter.

To Select the Drive:

1. Press the Left POSITION Button twice. The display will show:

2. Rotate the SELECT Control until the display shows:

3. Use the Right Position Button and the Select Control the Choose the Directory and Cut.

Chapter Four

STACK MODE

A Stack is a list of Cuts — a "playlist" that can be stored on any of the Drives of your DigiCart/II Plus. Some of the most powerful capabilities of DigiCart/II Plus are its stack features. You can create Stacks consisting of multiple Cuts *and* other Stacks. The difference is transparent, so it is useful to say "Event" to represent entries in a Stack. You can edit and update Stacks, and select between two types of Stacks called "Linear" and "Rotating". A third type, QuickStack, is not stored but is used to create Linear, Rotating or Compound Stacks, or to play back a particular sequence of events one time only.

Stacks conform to certain basic rules of operation. It will be helpful to keep these rules in mind as you read through the rest of this chapter.

- Stacks may include Items from different Drives and Directories.
- A Stack is only a *list* of Events to be played and does not include audio information.
- Only stacks may be listed in a Stack Directory.
- A Drive may contain 1000 Stacks.
- A Stack may contain up to 1000 Items.
- There is no limit to the total length of time of a Stack.
- A single Cut may be used in multiple locations within a Stack.
- If a Cut is edited, its edited version will play in a Stack.
- If a Cut in a Stack has been erased, or is unavailable (perhaps because a Zip Disk has been removed) a " * " will be displayed ahead of the Stack Time, and the Stack will not play. Restoration of the deleted Selection eliminates the " * " and the Stack will play. Alternately, any selection can be edited out of the stack.

STACK TYPES

Before you begin using Stack mode, it is important to understand the differences between Linear and Rotating Stacks. They each have unique applications and different operating characteristics. Compound Stacks are Stacks that contain other Stacks. They can be either Linear or Rotating Stacks and the Stacks within them can be either Linear or Rotating.

LINEAR STACK

A Linear Stack is a list of Items that can be played in sequence from a single start command. When each Item in a Stack has been properly edited, Linear Stacks provide seamless playback of multiple audio Cuts. This feature is particularly useful for editing music files, production beds, news interviews, or creating spot sets.

Music And Voice Editing

A single piece of music can be edited into different individual pieces (i.e.- intro., verse, chorus, etc.). These pieces may be re-assembled to create a different musical rendition, shorter or longer than the original, by placing them into a Linear Stack. For example, production music beds of longer duration can be edited into shorter pieces for ten or thirty second spots. News interviews sourced in the field may be condensed into shorter, more succinct versions for airplay.

Creating Spot Sets

Using the Linear Stack feature, you can compile spot sets in advance and initiate playback of a complete set on one DigiCart/II Plus with a single start command. Each spot is stored in sequence within a Linear Stack. By viewing the Stack (see SCAN later in this chapter), you can confirm that the correct spots have been selected, and also make adjustments or last minute changes to the list. A single spot may be used as many times as needed within a Stack. Because the number of spots in a Stack can be very large, it is possible to create a Stack of all the spots and IDs needed for an entire day, or individual day parts.

ROTATING STACK

A Rotating Stack is a list of Items only one of which is played from a single start command. Each successive press of the PLAY button initiates playback of the next Item in a Rotating Stack. Each time a Rotating Stack is played, the pointer for that Stack is "rotated" to the next Event in the Stack. This feature is particularly useful for spot rotation, or sequential playback of a series of individual effects, IDs, spots, news actualities, etc.

News Actualities

Interviews in the field or on the telephone may be acquired using portable DAT or reel-to-reel tapes. Once in the production studio, the raw material is transferred to DigiCart/II Plus for editing and prep. The individual parts can then be placed in a Rotating Stack on a removable Zip Disk, with each Item sequenced in the proper order. The Disk is then taken to the on-air studio, where the newsperson will be able to initiate playback of each actuality, simply by pressing the PLAY button when the next Item is needed.

Automated Liners & IDs

Multiple IDs, promos and liners can be stored in sequence within a Rotating Stack. This feature is powerful when used in conjunction with the internal hard disk of a DigiCart/II Plus. An entire day or several day's worth of IDs and promos can be stored, edited and updated continuously. Each time an automation system or operator sends a start command to DigiCart/II Plus, it will play the next Event. When playback of that Item is complete, it will advance to the next Selection in the Stack and be ready to PLAY upon receiving another start command.

Special Effects

Rotating Stacks can be useful for grouping together various effects to be used in production or during an air-shift. By dialing back and forth within the Stack in Edit Mode, any Item can be accessed and played immediately.

COMPOUND STACK

A Compound Stack is one that contains other Stacks. For a Linear Stack containing a Rotating Stack, each time the Linear Stack is played the Rotating element will be different. This allows you to introduce an ever changing freshness into a routine "air break" package. A Rotating Stack containing a Linear Stack will play all the Linear elements the same way each time without restarts.

The power of this system comes from the freedom to change any element without needing to rebuild an entire package. If a spot's contents remain the same but must have a "this morning", "this afternoon", "this evening" time reference, only the contents of one Cut needs to change. The basic spot's Stack is copied to two other Stack IDs and the time of day reference Cut changed in the copies. Adding a simple "M", "A", and "E" to the fifteen-character Stack NAME clarifies which is which.

NOTE: A Stack containing an embedded Stack may not be embedded in another Stack. A Stack with more than one level of embedding will be marked with an " * " and will not play. If you attempt to save a QuickStack that contains a compound Stack, a "STACK ERROR" message will result.

CREATING A STACK

The process of making a Stack (playlist) begins with creating a QuickStack by using PAUSE or MAKE PLAYLIST on the RC-210/220 Remote Control from 360 Systems. Often the QuickStack list is a one-time-only sequence, created "on the fly". Sometimes you will want to reuse the sequence. This decision must be made before the QuickStack is played. Each Drive's Stack Directory can hold 1000 Stacks, so you might want to establish the practice of saving each new QuickStack as a Stack. It is easy to ERASE a Stack if you change your mind.

BUILDING A QUICKSTACK

1. Press the PAUSE Button. (It will illuminate when pressed.)
2. Use the SELECT Control and the Left and Right POSITION Buttons to select a Cut or Stack (An Event).
3. Press the PLAY Button to add the first Event to the QuickStack.

```
X.XXXX        (EVENT NAME)

1                  HH:MM:SS
```

The number under the event ID counts the entries in the Quick Stack.

4. Repeat steps 2 and 3 to add as many Cuts or Stacks as needed to the list. The display shows:

```
X.XXXX        (NEW EVENT NAME)

2                  HH:MM:SS
```

The PLAY Button will begin to blink, indicating that more than one Item has been selected for Follow-On play. The Time under the NAME shows total QuickStack duration. To check the QuickStack's contents:

5a. Press the VIEW LIST Button.

5b. Use the SELECT Control to scan through the QuickStack.

(NOTE: The first Cut will not read out as Cut #1, only the Cuts that follow will read in this step. In fact, the second Cut will read as cut #1 in the stack. Once the list has been saved, all will read correctly.)

6. Press to release PAUSE (or press the MAKE PLAYLIST Button) to play the QuickStack.

The PAUSE Button will go dark and the QuickStack will play. The top line of the display shows the last Item in the stack, the bottom line presents the current Item and its timing information.

While playing, use the VIEW LIST Button and SELECT Control to see the remaining Items in the list. The number at the upper left shows how many Items *away* the top line event is from the Selection currently playing.

NOTE: At any time during the running of a QuickStack, you may press the LOOP Button. The current Selection will repeat until LOOP is pressed again.

To interrupt, press the STOP Button. The current Item will continue to completion. For immediate cancellation, press STOP again.

SAVING A STACK

After you have built a QuickStack you may examine it (VIEW LIST), Play it (release PAUSE) or store it as a Stack.

1. To save a QuickStack, press the ENTER/YES Button. The display will show either:

```
LINEAR

SELECT WITH ARROWS
```

or

```
ROTATING

SELECT WITH ARROWS
```

2. If desired, press the Left or Right POSITION Buttons to choose the alternate item.
3. Press the ENTER/YES Button to confirm the selection.

DigiCart/II Plus will assign the next available ID and NAME. The display will read:

```
X.SXXXL                NEWSTK_XXX

FIRST CUT IN THE       HH:MM:SS
NEW STACK
```

Use CHANGE NAME in the UTILITY MENU to give the Stack a new name.

PLAYING A LINEAR STACK

Linear Stack IDs are followed by an " L ". All Items in a Linear Stack will play in sequence without interruption.

1. Rotate the SELECT Control until the name of the Linear Stack you want appears in the display.

```
X.SXXXL          NEWSTK_XXX

XXXXXXX            HH:MM:SS
```

The bottom line shows total Stack Items and total Stack Time.

2. Press PLAY.

Once you begin playback of a Linear Stack, the current Selection and its playing time will be shown on the bottom line of the display.

```
1.SXXXL          NEWSTK_XXX

ITEM NAME          HH:MM:SS
```

USING THE STOP BUTTON IN A LINEAR STACK

When in a Linear Stack, pressing STOP Button once will discontinue playback at the end of the current Cut. The PLAY Button will illuminate continuously, indicating there are no longer any follow-on events to be played. Pressing STOP twice will *immediately* discontinue playback of the Stack. Once the PLAY light has gone solid, indicating the last Cut, Pressing STOP will immediately end playback.

PLAYING A ROTATING STACK

An "R" follows rotating Stack IDs. Only the currently selected Event in a Rotating Stack will play.

1. Use the SELECT Control until the name of the Rotating Stack you want appears in the display.

```
1.SXXXR          (STACK NAME)

 X                 HH:MM:SS
```

2. Press the PLAY Button.

The Event at the bottom of the Stack will play. Each subsequent press of the PLAY button will cause the *next* Event to play.

NOTE: Each time a Rotating Stack is accessed, it will play the next Event. To reset the Stack to any other Selection, edit the Stack and use SCAN. Upon power up, all rotating Stacks are reset to Play the first Event in the Stack.

VIEWING A STACK

To check the contents of a Stack:

1. Press the VIEW LIST Button.
2. Use the SELECT control to scan the contents of the Stack. The display will show:

```
1  1.XXXX          EVENT NAME

 HH:MM:SS          48K   AC-2
```

The number at the upper left shows the Event's position in the Stack.

VIEWING A STACK — *While it Plays*

Press VIEW LIST Button and rotate SELECT to see Stack items remaining to be played. The number at the upper left shows how far away the top line Selection is from the Item currently playing. (Note: This only works for Linear Stacks. In order to view the next Cut in line for a Rotary Stack, go into the Edit menu, then play the Stack. Once the first Cut has finished, the name of the next cut will appear on the top line of the display.)

COPYING A STACK

Stacks may be copied to any other Stack index number (five-character ID) in any Stack Directory. Details about copying a Stack may be found in Chapter Three: *EDIT MENU OPERATIONS.*

CONVERTING A LINEAR STACK TO A CUT

You may store a Stack as a Cut. This can be useful to allow a Stack to be consolidated onto a Zip Disk for transfer to another a system. Use the POSITION Buttons and SELECT to designate an ID. There are limits to the kind of Stack that may become a Cut:

- The Stack must be Linear with *no* embedded Stacks.
- All Cuts in a Stack to be copied must be of the same Sample Rate and Format.
- The new Cut will occupy disk space equal to the source Cuts.

- When converting a Stack to a Cut, an unoccupied index location must be used.
- COPY EDITED trims each Cut in the Stack according to its HEAD and TAIL settings. The resulting Cut has the Fade-in and Gain setting of the first Cut of the Stack and the Fade-out of the last Cut in the Stack. (Copy Original will also perform a Stack to Cut conversion. However it will copy the Cuts in their entirety, ignoring Head and Tail Trim Edits.)

To convert a linear stack to a cut:

1. Use the SELECT Control and Left/Right POSITION Buttons to choose the Stack.
2. Press the UTILITY MENU Button.
3. Select COPY EDITED.
4. Press the ENTER/YES Button. The display will show:

```
X.SXXX(L/R)        STACK NAME

SELECT
```

5. Use SELECT and POSITION Buttons to choose a destination Drive and a Directory from 0 TO 9.
6. The display will show:

```
X.XXXX        (CUT NAME)

REPLACE OR SELECT #
```

7. Rotate the SELECT Control to choose an unused index Number. The second line of the display will change to "Select New Index #)
8. Turn the SELECT Control to find a destination Cut number.
9. Press the ENTER/YES Button to copy the Stack. The display will briefly read:

```
COPYING

DESTINATION ID    STACK NAME
```

When copying is completed, DigiCart/II Plus returns you to the Cut Layer and displays:

```
DESTINATION ID (STACK NAME)

HH:MM:SS          48K    AC-2
```

The new Cut is automatically given the same name as the source Stack.

STACK EDIT MODE

By now you are familiar with the routine uses of EDIT MENU for Cuts. For Stacks, EDIT MENU takes you through another doorway to a different editing environment. The Stack Edit Menu provides six options:

INSERT	REMOVE	CHANGE STACK TYPE
APPEND	TRUNCATE	SCAN

'SCAN'

SCAN is the mode that lets you review the contents of a Stack. Use either SELECT *or* POSITION Arrows to Scan through the Stack. Stack Edit operations begin from, and return to the Scan Mode. While in the Stack Edit Menu, Select SCAN and press the ENTER/YES Button to return to the Scan Mode without performing any of the Edit operations.

1. Use the SELECT Control to determine the Stack to be edited. Press the EDIT MENU Button.

2. DigiCart/II Plus enters the Scan Mode. The display shows:

```
1      X.XXXX        EVENT NAME

HH:MM:SS             48K   AC-2
```

The top line displays the Stack Event Number, ID and Name. Event Time, Sampling Rate and Record Format are below. If the Event is a Stack, the second line displays the name of the first Cut in the Stack.

To review the contents of the Stack rotate the SELECT Control or press the PLAY Button. The Stack will Play beginning with the Event selected. Linear Stacks will play to the end. Rotating Stacks will play only the selected item.

3. Press ENTER/YES to enter the Stack Edit Menu. The display will show:

```
X  X.XXXX          EVENT NAME

              INSERT
```

Turn SELECT to the Stack Edit function required.

'INSERT'

Adds a Cut or Stack immediately *before* the current Selection in the Scan Mode.

1. Press the ENTER/YES Button.
2. Select INSERT.
3. Press the ENTER/YES Button again. The display shows:

```
X.XXX (L/R)          (STACK NAME)

                SELECT
```

4. Use the SELECT and POSITION Buttons to find the Event you wish to Insert.
5. Press the ENTER/YES Button to insert the selected event.

   DigiCart/II Plus returns to the Scan Mode.

6a. Press the ENTER/YES Button to continue editing.

- OR -

6b. Press the CANCEL/NO Button to exit the Stack Edit Menu. The display shows:

```
X  X.XXX (L/R)     (EVENT NAME)

   SAVE CHANGES?     Y/N
```

The number at the upper left shows the New Item's position in the Stack.

7. Press the ENTER/YES Button to Save or the CANCEL/NO Button to exit. DigiCart/II Plus returns you to the Stack Directory.

'APPEND'

Adds a Selection to the *end* of the current Stack.

From the Scan Mode,

1. Press ENTER/YES
2. Select APPEND.
3. Press the ENTER/YES Button again. The display shows:

```
X.XXXX          (STACK NAME)

          SELECT
```

4. Use SELECT and POSITION Arrows to find the Event you wish to APPEND.
5. Press the ENTER/YES Button to APPEND. DigiCart/II Plus returns to the Scan Mode.
6. Press the ENTER/YES Button to continue editing or press the CANCEL/NO Button to exit the Stack Edit Menu. The display prompts:

```
X.XXXX          (NEW NAME)

     SAVE CHANGES?  Y/N
```

The number at the upper left shows the New Item's position in the Stack.

7. Press ENTER/YES to Save or CANCEL/NO to exit. DigiCart/II Plus returns you to the Stack Directory.

LOOPING A LINEAR STACK

Using APPEND, Select the Stack *itself* as the Appended Event. This tells DigiCart/II Plus to play the Stack again as the next Event. In the Stack Directory, Looped Stacks may be recognized by a Stack Time display that reads: 99:99:99.

'REMOVE'

Deletes the currently selected Event from the Stack. From the Scan Mode,

1. Press the ENTER/YES Button.
2. Use the Select Control to choose REMOVE.
3. Press the ENTER/YES Button again. The display reads:

```
X.XXXX          (EVENT)

          REMOVE
```

4. Press THE ENTER/YES Button to remove the selected Event. DigiCart/II Plus returns to the Scan Mode.
5. Press the ENTER /YES Button to continue editing or press the CANCEL/NO Button to exit the Stack Edit Menu. The display prompts:

```
X.XXXX              (NAME)

     SAVE CHANGES?  Y/N
```

6. Press THE ENTER/YES Button to Save or the CANCEL/NO Button to exit. DigiCart/II Plus returns you to the Stack Directory.

NOTE: If a Cut required for a Stack has been deleted, or resides on a Drive not currently available to DigiCart/II Plus, then " * " will be displayed next to the Stack TIME when that Stack is selected. Use SCAN to determine which Item is missing. The " * " will appear when the missing event is selected. REMOVE the missing Event or recreate it in its same ID. If the Stack with the missing Event is part of other Stacks, the warning " * " will appear on those too.

'TRUNCATE'

Deletes *all* Items *following* the current Selection. From the Scan Mode:

1. Press the ENTER/YES Button.
2. Select TRUNCATE.
3. Press the ENTER/YES Button again. The display reads:

```
X.XXXX              (NAME)

          TRUNCATE
```

4. Press ENTER/YES to activate. DigiCart/II Plus returns to the Scan Mode.
5. Press ENTER /YES to continue editing or press the CANCEL/NO button to exit the Stack Edit Menu. The display prompts:

```
X.XXXX              (NAME)

     SAVE CHANGES? Y/N
```

6. Press the ENTER/YES Button to Save or the CANCEL/NO Button to exit. DigiCart/II Plus returns you to the Stack Directory.

'CHANGE STACK TYPE'

Switches between Linear and Rotating Stack types. From the Scan Mode:

1. Press ENTER/YES.

2. Select CHANGE STACK TYPE. Press the ENTER/YES Button.The display prompts:

```
LINEAR

SELECT WITH ARROWS
```

3. Press *either* the LEFT/RIGHT POSITION Buttons to change Stack type.

4a. Press the ENTER /YES Button to continue editing or press the CANCEL/NO Button to exit the Stack Edit Menu.

The display prompts:

```
ROTATING

SAVE CHANGES?  Y/N
```

5. Press ENTER/YES to Save and exit or CANCEL/NO to exit.

NOTE: A looped Linear Stack may not be converted to a Rotating Stack.

CHAPTER FIVE
MAINTENANCE GUIDE

This Chapter describes the subassemblies of your DigiCart/II Plus and provides information relating to their use, specifications, maintenance and repair. Interface Schematics are included in Appendix A.

WARNING

HIGH VOLTAGES EXIST WITHIN THIS PRODUCT THAT MAY BE FATAL.

DO NOT REMOVE THE COVER. THERE ARE NO USER SERVICEABLE PARTS WITHIN.

REFER ALL SERVICING, MODIFICATIONS AND PRODUCT UPGRADES TO A QUALIFIED SERVICE TECHNICIAN.

FREQUENTLY ASKED QUESTIONS

SYSTEM MAINTENANCE AND REPAIR

The design and construction of DigiCart/II Plus is very different from analog cart machines. Digital circuitry enjoys a reputation for long term reliability and is largely free of the subtle degradation that slowly damages audio quality. *Your DigiCart/II Plus has no required adjustments.* Maintenance issues relate to keeping it clean, operating at a safe temperature and correctly connecting external devices.

SYSTEM RELIABILITY

Long term reliability of DigiCart/II Plus can be understood in terms of similar systems found in computers. Three primary factors are prominent in failure analysis of such equipment: internal operating temperature, power level of component assemblies and dirt. The lifetime of electronic equipment increases dramatically if it is operated at lower temperatures. DigiCart/II Plus contains a small cooling fan. It is extremely important that this fan be allowed to do its job.

NOTE: Do not block the ventilation slots on the side or rear of the unit. Never install it in a custom cabinet without very good air circulation to the room.

High power assemblies tend to have shorter life spans than circuits that do not generate much heat. There is not much that can be done about this, but it is useful to know that *power supplies are likely to fail first.* Providing good ventilation is key to obtaining maximum life.

Dirt adversely affects DigiCart/II Plus. It shortens the life of the removable Zip Disks by coating the disk surface and interfering with the head's ability to read data from the disk surface. Dirt will also shorten the life span of moving parts in DigiCart/II Plus - such as the fan and the motor assembly of the Hard Disk Drive. 360 Systems recognizes that DigiCart/II Plus is intended to work for many years, and that it will eventually require service. Drives are therefore installed in a way that allows for rapid field replacement by a qualified technician.

OTHER RELIABILITY FACTORS

Optional Hard Disk assemblies currently being supplied have MTBF (Mean Time Between Failure) figures of 250,000 hours. Unlike earlier hard disks, current units are not "likely to crash" within a few years. They do *not*, however, have a 250,000 hour lifetime, but their service life is estimated by the manufacturer to be in excess of five years. MTBF figures are a good forecast of eventual service life. MTBF is calculated as:

$$\text{MTBF} = \frac{\text{(Number of Units in Sample Group) X (Hours of Operation)}}{\text{Number of Failures}}$$

DESCRIPTION OF SYSTEM MODULES

DigiCart/II Plus employs a modular form of construction that makes it quick and easy to replace defective components. All active electronics are on sub-assemblies that can be removed as a unit. The rear of DigiCart/II Plus is a two-slot cardfile, carrying most electronics on plug-in printed circuit boards. Service of these cards will normally be by card replacement, since they employ fine-pitch surface mounted components and require test equipment not normally possessed by audio technicians.

CAUTION

Components in this machine are sensitive to damage by static electricity. *Ordinary handling of circuit cards can destroy components.* Before removing any circuit assembly, prepare a static free work area and ground yourself before touching a circuit assembly. Removed assemblies must be stored in anti-static bags for transportation.

REMOVAL OF PLUG-IN BOARDS

Most of DigiCart/II Plus circuits are located on two large circuit cards that plug into the rear of the unit. It is not necessary to remove the cover from DigiCart/II Plus, or even to remove it from an equipment rack to gain access to these cards. They are removed from the chassis by screwing a pair of extractor handles (P/N PCBEX) into the two 6-32 threaded holes in the card panels, and pulling. (Refer to the illustration on the following page)

THE CPU CARD

The top slot in the cardfile contains the CPU card (Central Processing Unit). Most non-audio functions are centralized on this card, such as SCSI disk drive control, memory, clock/calendar, keyboard interface, and serial ports. The card is removed from DigiCart/II Plus chassis by screwing in a pair of extractor knobs (P/N PCBEX) into the two 6-32 threaded holes in the rear panel, and pulling. (Refer to the illustration on the following page)

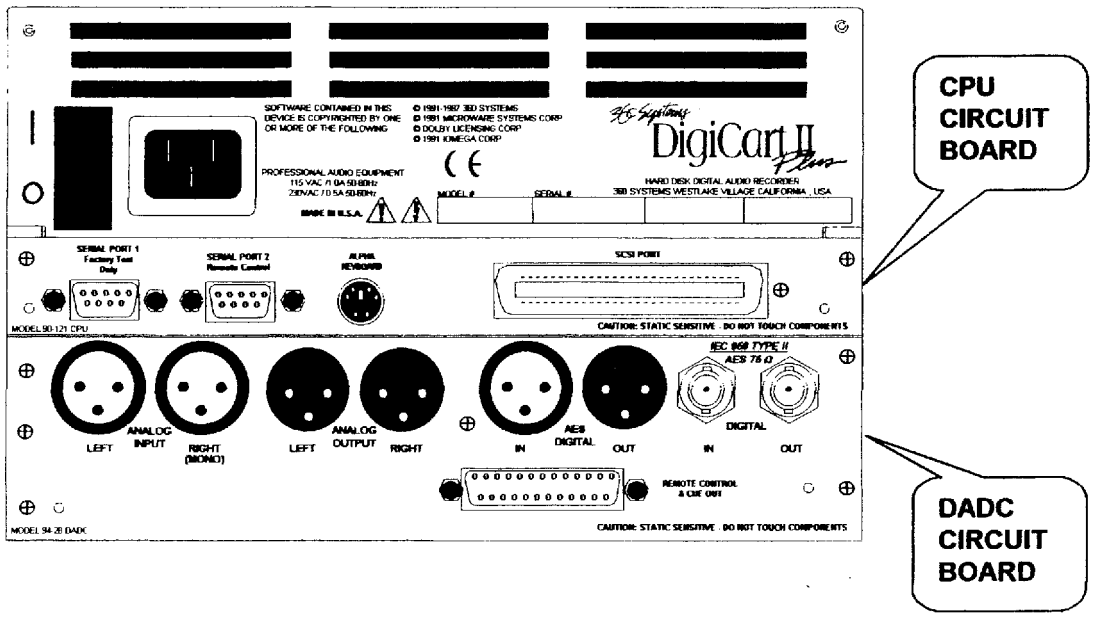

FIG 1. REAR PANEL — ILLUSTRATING POSITION OF CPU AND DADC CARDS.

LITHIUM CELL REPLACEMENT

A 3-volt lithium battery provides backup power to static RAM located in the clock/calendar IC. This battery should be replaced every two years with Ray-O-Vac part number BR-2325 or equivalent. It will be necessary to reset the Setup Menu functions when the battery is replaced. (See the appropriate headings in the Table Of Contents.) If the battery is allowed to die, a battery backup error message will appear on the front panel display.

In some cases marginal battery voltage can cause memory corruption that can cause DigiCart/II Plus to fail to initialize. An indication of this will be by the Display, at startup, showing a blinking cursor only. The unit WILL operate without the battery, but all SETUP information will be lost on power down.

OPERATING SYSTEM ROMS

Two 40-pin ROMs (U19 and U20) are located on the CPU card. These contain the programs that control all DigiCart/II Plus activities. When replacing the ROMs for upgrades, heed the number (either U19 or U20) on the label. Each must be placed in the correct socket location. A notch on one end of the ROM must face toward the center of the PC card, and care must be exercised in guiding all 40 pins into the socket recesses. Firm pressure with the thumbs will seat the new ROM in its socket.

THE AUDIO CIRCUIT CARD

The second slot in the cardfile contains the DADC card. The Analog-to-Digital Converter and Digital-to-Analog Converter translate analog information into a digital audio format, and vice versa. Audio inputs and outputs are available in analog and digital formats. The DADC card additionally carries all front panel interface circuitry for buttons, LEDs and for the display. The card is removed from DigiCart/II Plus chassis by screwing in a pair of extractor knobs (P/N PCBEX) into the two 6-32 threaded holes in the rear panel, and pulling.

The following schematics are included in Appendix A:

- Input Differential Amplifiers
- Output Differential Amplifiers
- Cue Output Relay
- Remote Control Circuits
- Lamp Drivers

ELECTRIC SHOCK HAZARD

DISCONNECT THE POWER CORD BEFORE REMOVING THE COVER FROM DIGICART/II PLUS.

HIGH VOLTAGES EXIST IN THIS EQUIPMENT THAT MAY BE DANGEROUS OR FATAL IF YOU COME IN CONTACT WITH THEM.

REFER ALL SERVICING TO QUALIFIED PERSONNEL.

SWITCHING POWER SUPPLY

A switching power supply provides power for all non-audio functions. This modular unit produces +5 volts, +12 volts and -12 volts. There are no user serviceable parts inside. Associated problems are best solved by replacement of the entire unit. Contact 360 Systems Customer Service to obtain a replacement and installation instructions.

LINEAR POWER SUPPLY

A linear power supply provides bipolar 15 volts for the audio circuits. It contains no user serviceable components. It is replaced as an

entire unit. Contact 360 Systems Customer Service to obtain a replacement and instructions for installation.

DISPLAY MODULE

The display is an integrated unit consisting of a display processor, power conversion and vacuum fluorescent display envelope. It is replaced as an entire unit. Contact 360 Systems Customer Service to obtain a replacement display and instructions for installation.

SWITCH PC CARD

The "soft touch" illuminated push buttons and the input level controls are mounted to the Switch PCB. There are no active electronics on this PCB. The caps on these buttons cannot be removed and have no user serviceable parts. Please contact 360 Systems Customer Service to obtain a replacement button assembly and instructions for installation.

ILLUMINATED SWITCHES & SELECT KNOB

The SELECT knob and illuminated RECORD STOP and PLAY push buttons are individually mounted to the front panel. They are long-life devices and should require no maintenance other than lamp replacement. Replacement lamps for the push buttons are 14 volt and may be extracted from the front after removing the colored plastic lens.

ZIP DISK DRIVE REPLACEMENT

The Zip Disk Drive is mounted in DigiCart/II Plus chassis in such a way as to allow for quick and easy replacement.

To replace the Zip Disk Drive:

1. Turn power off and disconnect all audio and power cables from the rear panel of DigiCart/II Plus.
2. Remove four Phillips head cover mounting screws from the sides of DigiCart/II Plus and remove the cover from chassis.
4. Unplug the four-lead power supply cable and SCSI interface cable from the rear of the Zip Disk Drive.
5. Remove four Phillips head Zip Disk Drive mounting screws from the side panel of DigiCart/II Plus chassis. There are holes in the chassis, on axis with these screws, to facilitate their removal.
6. Carefully lift the Zip Drive out of chassis.
7. Perform above operations in reverse order to install a new Zip Disk Drive. The SCSI ID for the internal Zip must be 0.

INSTALLING AN ADDITIONAL INTERNAL HARD DISK

An additional internal hard disk may be installed at any time in your DigiCart/II Plus chassis. The following hard disks are available:

1 GB (Model HD-1000)

2 GB (Model HD-2000)

3 GB (Model HD-3000)

All of these Drives are the same physical size and each is mounted in the same way. For installation information, please refer to the installation included with the Hard Disk kit.

WARNING

HAZARDOUS VOLTAGES EXIST WITHIN THIS PRODUCT.

THE PROCEDURES DESCRIBED IN THIS SECTION REQUIRE THE SERVICES OF A TRAINED ELECTRONICS TECHNICIAN.

FOR YOUR SAFETY, HAVE THIS WORK PERFORMED BY A QUALIFIED PERSON.

SCHEMATICS

This section contains schematics for user repairable circuits and wiring diagrams and pinouts for audio, data and remote control connections.

AUDIO CONNECTOR WIRING

CONNECTOR: INPUT: XLR TYPE FEMALE
OUTPUT: XLR TYPE MALE

XLR	BALANCED	UNBALANCED
PIN–1	GROUND (SHIELD)	GROUND.
PIN–2	AUDIO " + "	AUDIO " + " OR "HOT"
PIN–3	AUDIO " – "	AUDIO " – " (SHIELD) (JUMPER TO PIN–1 FOR GROUND REFERENCE)
SHELL	GROUND (NORMALLY NOT CONNECTED)	GROUND

NOTE: If AC hum problems are encountered, disconnect the cable shields from pin–1 (cut the jumper in unbalanced systems). Shield grounding will then be provided from the other end only, and the path for a probable "ground loop" is broken.

CAUTION

DO NOT USE "AC GROUND LIFTERS"
TO SOLVE HUM PROBLEMS.
A SERIOUS SHOCK HAZARD MAY RESULT.

REMOTE CONTROL AND CUE OUT CONNECTOR

NOTE: If your DigiCart/II Plus is replacing a DigiCart/I or DigiCart/II without digital outputs in an installation that interfaces to the remote Control Connector, the pinouts on the DigiCart/II Plus will differ from those on the earlier machines. Please contact 360 Systems for documentation on the older machines.

REMOTE CONTROL AND CUE OUT CONNECTOR

(25 PIN "D" FEMALE)

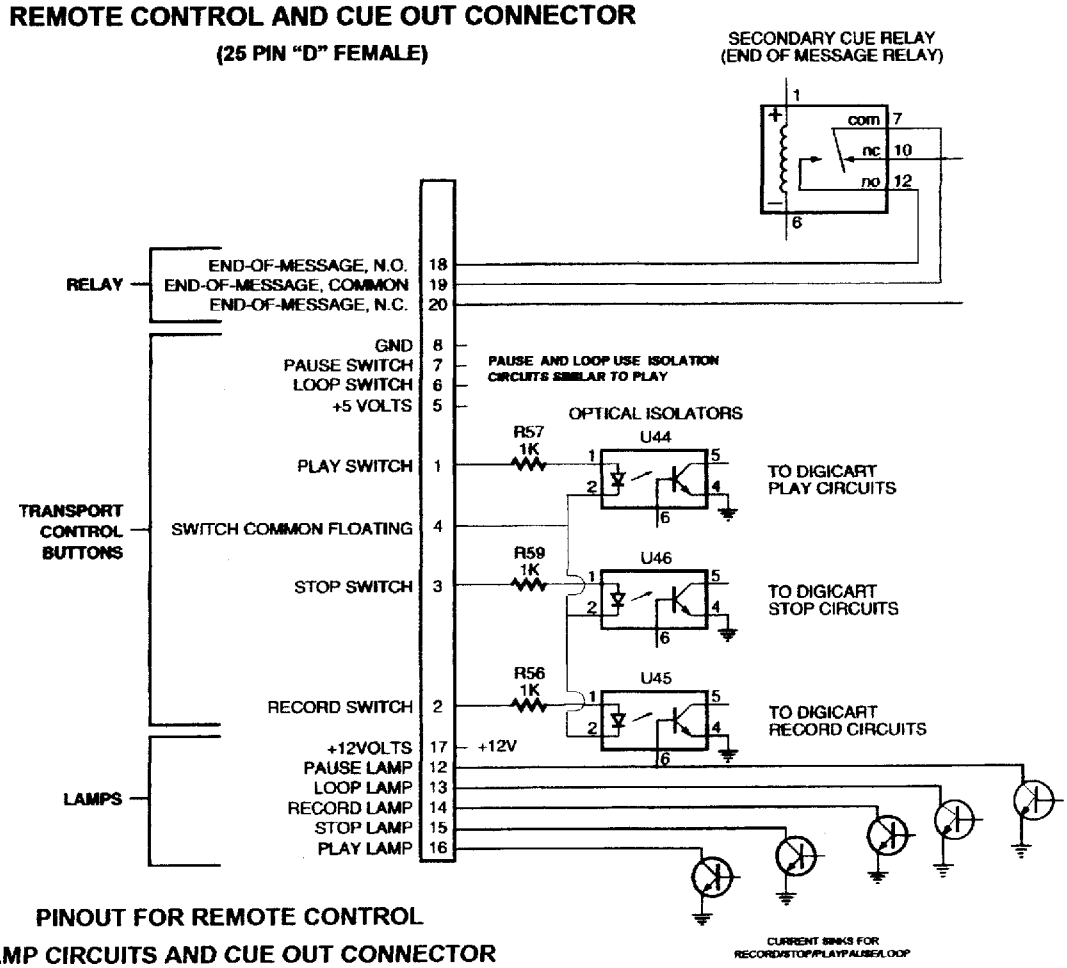

PINOUT FOR REMOTE CONTROL LAMP CIRCUITS AND CUE OUT CONNECTOR

(25 PIN "D" MALE)

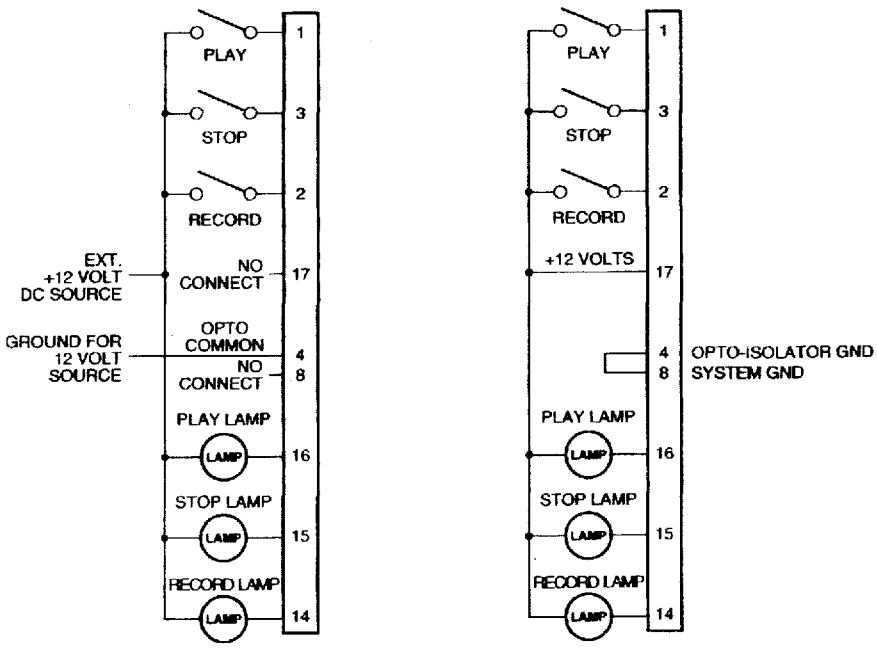

ISOLATED, EXTERNALLY POWERED CIRCUIT

NON-ISOLATED, INTERNALLY POWERED CIRCUIT

SERIAL REMOTE CONTROL PROTOCOL

A general description of DigiCart/II Plus Remote Control Serial Interface Protocol is included in this section. The following Message Summary provides an outline of commands and responses that can be executed via Serial Port 2.

Host Device Message Summary:

MESSAGE NAME		
Add To Playlist	Get Preset Info	Simulate Button
Assign/Clear Preset	Get Stack Info	Simulate Knob
Copy	Get Timer Info	Stop
Create Stack	Loop	Cart Info
Display Message	Pause	Cart Status
Enable/Disable BCD	Play	Cut Info (Find Cut - Index)
Erase	Play Preset	Cut Info (Find Cut - Name)
Find Cut - Index	Record	Cut Notes
Find Cut - Name	Rename	Device Info
Get Cart Status	Reset Cart	Directory Info
Get Cut Notes	Select	Preset Info
Get Device Info	Set Cart Info	Stack Info
Get Directory Info	Set Cut Info	Timer Info

Complete protocol documentation is available to qualified parties. Authorization as a DigiCart/II Plus third party software developer may be discussed by contacting the 360 Systems sales department.

HARDWARE FORMAT

The serial connection is a 4-wire RS-422A full-duplex channel. Please refer to Chapter 2, Page 11:

EIA 422 Serial Interface for connector and cabling details.

DATA FORMAT

The data format follows the ES-Bus specification in that the data transfer is asynchronous, 8 bits per byte, even parity, 1 start and 1 stop bit, for a total of 11 bits.

In all cases, the message structure is fully compatible with ES-Bus. In general, all messages will be acknowledged by an ACK if successful or NAK if an error occurred.

Pinout for Serial Port 2:

Pin 1	GND
Pin 2	+ 5 VOLTS (not normally used)
Pin 3	GND
Pin 4	TX +
Pin 5	TX –
Pin 6	HSK OUT (not normally used)
Pin 7	HSK IN (not normally used)
Pin 8	RX +
Pin 9	RX –

Chapter Six

D-NET File Transfer Network

INTRODUCTION

The D-NET capabilities of your DigiCart/II Plus allow you to use its digital audio interfaces for making high speed audio transfers between machines. With D-NET, you'll move audio around your facility with speed, ease and security.

FEATURES

- You can transfer individual audio cuts, directories or entire drives and their associated file information from one DigiCart/II Plus to one or more DigiCart/II Pluses.
- Transfer rates are faster than playback rates.
- D-NET supports both the AES/EBU and AES/SMPTE-75 digital interfaces.
- The "Echo" Feature lets you relay a transfer from one DigiCart/II Plus to the next DigiCart/II Plus in a "Daisy Chain" network.
- Individual machines can be configured to allow or disallow automatic reception of transfers.
- Transfers are one-way and are initiated from the sending machine.
- Files can be transferred to a specific cut index or to the 'Mail Box' at the destination. The 'Mail Box' is always in the same place and protects you from accidentally overwriting existing files.
- Destination machines automatically discard files received with errors.

TRANSFER RATES

SAMPLE RATE	FORMAT	D-NET TRANSFER RATE vs. REAL TIME TRANSFER
48k	AC2	8:1
48k	STEREO	1.5:1
48k	MONO	3:1
44.1k	STEREO	1.6:1
44.1k	MONO	3.2:1
32k	STEREO	2.25:1
32k	MONO	4.5:1

ELECTRICAL SPECIFICATION FOR D-NET TRANSFERS

File transfers may be accomplished via either of two digital audio interfaces:

- AES-3ID (Proposed AES standard, 75Ω impedance, BNC connector)
- AES-3 (AES standard, 110Ω impedance, XLR connector)

AES-3ID

The AES-3ID interface has been designed to operate using coaxial cable with a nominal impedance of 75Ω, terminated with a male BNC. When the coax is directly connected from a DigiCart/II Plus output to the input of another DigiCart/II Plus, the internal electronics of the machines create a doubly terminated cable @ 75Ω. If other devices are inserted in the data path (such as routers or switchers) the user should ensure that the transmitting DigiCart/II Plus drives a nominal impedance of 75Ω and that the receiving DigiCart/II Plus is being driven by an output presenting a nominal 75Ω output impedance. This will serve to maintain correct signal amplitude and to minimize transmission errors caused by signal reflections from the far end of the cable. Use of 'T' connectors to drive multiple DigiCart/II Pluses is not recommended as this would violate the cable termination requirements.

At the time of this writing, the AES-3ID interface has been successfully tested using 150m of Belden 8281, 75Ω coaxial cable.

AES-3

The AES-3 interface has been designed in compliance with the AES-3 recommended practice for serial transmission format for two-channel digital audio data. The connectors required for this interface are described in IEC 268-12, and are XLR three-pin connectors. The pin usage is:

- PIN 1: CABLE SHIELD OR SIGNAL EARTH
- PIN 2: SIGNAL
- PIN 3: SIGNAL

Note: The polarity of pins 2 and 3 is not significant.

The recommended cable for use with AES-3 is balanced and shielded with a nominal impedance of 110Ω at frequencies from 0.1 to 6.0 MHz. The maximum recommended cable run for file transfer using AES-3 is 100 meters.

D-NET SETUP

A D-NET transfer is always initiated at the Source DigiCart/II Plus. However, both the Source and Destination DigiCart/II Plus require setup. It will be clearly stated in this chapter whether a Setup Menu procedure refers to the Source or Destination DigiCart/II Plus.

You can access the File Transfer Menu by pressing the D-NET XFER Button or selecting FILE XFER MENU after pressing the UTILITY MENU Button. Once in the File Transfer Setup Menu, you'll navigate through the menus with the SELECT Control and the Left and Right POSITION Buttons. You'll confirm selections with the ENTER/YES Button and cancel them by pressing the CANCEL/NO Button.

NOTE: Setup can be done from a 360 Systems RC-220 remote control or an RC-205 Mini-Keyboard. Please refer to the operations manual for your remote control for complete instructions.

The following is a description of the File Transfer Setup Menu items and how to set them.

RECEIVER NAMES AND DESTINATION NAMES

Your DigiCart/II Plus may be assigned a Receiver Name to identify it as the "target" for a file transfer from another DigiCart/II Plus. When initiating a file transfer, (See "Making a File Transfer) the Receiver Name

of the target DigiCart/II Plus will be entered on the source DigiCart/II Plus as the as the Destination Name for the transfer.

If a DigiCart/II Plus is not assigned a Receiver Name, it will receive transfers with any or no Receiver Name, provided the destination Drive and Directory are correct. For most systems, if you plan to use Receiver Names, ALL units should have a Receiver Name programmed.

WILDCARD TRANSFERS

A powerful feature of D-NET is the ability to perform Wildcard transfers. A Wildcard Transfer is a simultaneous, selective transfer to multiple machines. To enable a Wildcard Transfer, the target machines must share a common component in their Receiver Names.

In your facility for example, you may need to simultaneously transfer from one DigiCart/II Plus in a production room to all the DigiCart/II Pluses in master control. Simply assign "MASTER 1, MASTER 2,...etc." as Receiver Names on the machines in master control. To make a Wildcard Transfer to all of the those machines, use "MASTER ✶" as the Destination Name on the source DigiCart/II Plus in the production room. The "✶" symbolizes the variable component on all of the Receiver Names of the machines in master control.

If you set "✶" only as the Destination Name for a transfer, the transfer will be made to every DigiCart/II Plus that is enabled to receive transfers.

ASSIGNING A RECEIVER NAME

To assign a Receiver Name:

1. Press the D-NET XFER Button. (It will illuminate when pressed) Rotate the Select Control counter-clockwise until the display shows:

2. Press the ENTER/YES Button. The display will show:

3. Using the Select Control and the Left and Right POSITION Buttons, enter the new Receiver name. The name can have from 1 to 15 characters consisting of any combination of letters, digits, dashes and spaces. Leading and trailing spaces are not significant and are removed when the name is saved. When you have spelled out the new Receiver name, press the Right POSITION ARROW Button until the cursor is to the right of the last character in the new destination name. Press the ENTER/YES Button. The display will show:

```
RECEIVER  NAME

(NEW  RECEIVER  NAME)
```

To erase a Receiver Name and allow a DigiCart/II Plus to receive transfers regardless of Destination Name:

1. Press the D-NET XFER Button. (It will illuminate when pressed) Rotate the Select Control counterclockwise until the display shows:

```
RECEIVER  NAME

(PREVIOUSLY USED RECEIVER  NAME)
```

2. Press the ENTER/YES Button twice. The display will show:

```
RECEIVER NAME

(NONE - RECEIVE  ALL)
```

MAIL BOX OR DESTINATION LOCATION TRANSFERS

A convenient method for making D-NET transfers is to send to the "Mail Box" on the Receiver machine. For convenience, the Mail Box is always Directory 9. If you transfer to the Mail Box, it will be stored in the next available index.

There are two significant benefits of transferring to the Mail Box:

- The transfer will never overwrite existing cuts in the Mail Box.

- A Receiver can be set up to accept ONLY those transfers addressed to its Mail Box, thus enabling it to accept non destructive transfers only.

You may also enter a specific Destination Location when making a D-NET transfer. This method enables you to transfer files to the location that is most useful. Many DigiCart/II Plus users have well structured name and location conventions that make this type of transfer very convenient, because you can transfer a cut directly to its final destination and be able to find it easily. Index numbers assigned to Stacks or Presets maintain those associations, allowing Playlists to be updated, or parts of a preset driven set of effects to be changed.

When no Destination Location is specified, D-NET will make the transfer to the same Location in the Receiver as the file originated from in the source machine.

The 360 Systems Instant Replay can receive Cuts in AC-2 format from your DigiCart/II Plus. As the Instant Replay has only a single Directory, specific designation Transfers must be made to Disk 1, Directory 0. Mail Box Transfers will be placed in the lowest available, after the highest numbered existing Cut.

NOTE: A TRANSFER MADE TO A SPECIFIC LOCATION WILL REPLACE ANY FILES AT THAT LOCATION.

To set the type of transfers your DigiCart/II Plus will accept:

1. Press the D-NET XFER Button. (It will illuminate when pressed) Rotate the Select Control until the display shows either:

TRANSFERS TO ACCEPT

ALL

or

TRANSFERS TO ACCEPT

MAIL BOX ONLY

2. If desired, use the the Left and Right POSITION Buttons select the alternate menu item. Confirm your choice by pressing the ENTER/YES Button.

To make a transfer, refer to "Making a File Transfer" in this chapter.

FILE RECEIVER

Setting the File Receiver enables or disables file reception on your DigiCart/II Plus. When set to ON your DigiCart/II Plus will receive file transfers. When set to OFF, the machine will not receive file transfers.

NOTE: DigiCart/II Plus automatically disables Input Monitor when File Receive is on. It is still indicated as ON in the Setup Menu and will automatically resume when File Transfer is turned off. Input monitoring during Record Ready is unaffected.

To set the File Receiver on your DigiCart/II Plus:

1. Press the D-NET XFER Button. Rotate the Select Control and the display will show either:

RECEIVER INPUT

ON

or

RECEIVER INPUT

OFF

2. If desired, use the Left and Right POSITION Buttons to select the alternate menu item. Confirm your choice by pressing the ENTER/YES Button.

ECHO FUNCTION

If your D-NET network is configured in a "Daisy Chain" and the Echo Function is ON, you will able to relay the incoming transfer to the digital input of a DigiCart/II Plus to the digital output on that machine and on to the next DigiCart/II Plus in the network.

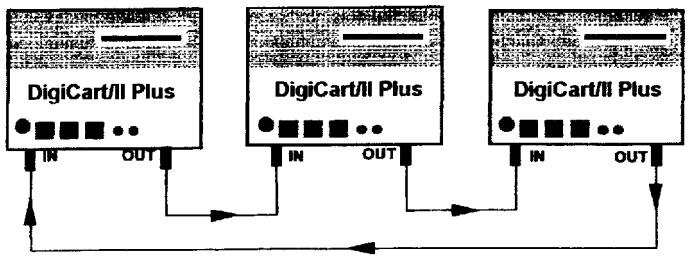

Figure 3. A DigiCart/II Plus "Daisy Chain" Network

To set the Echo Function on your DigiCart/II Plus Receiver:

1. Press the D-NET XFER Button. Rotate the Select Control until the display shows either:

ECHO DURING RECEIVE

OFF

or

ECHO DURING RECEIVE

ON

2. If desired, use the Left and Right POSITION Buttons select the alternate menu item. Confirm your choice by pressing the ENTER/YES Button.

NOTE: If a DigiCart/II Plus in the network is powered OFF, is in a Play or Record mode, or has its D-NET Receive off it will NOT "Echo" or relay the transfer to the next machine in the network. This is true regardless of the configuration determined during Setup.

Echo should be turned off whenever the digital outputs are used for audio transmission. Using the digital outputs for digital audio with Echo on can cause clicks and pops in the unit receiving digital audio from the DigiCart II/Plus. Facilities that make extensive use of digital audio should consider the use of a distribution amplifier or router and implement a "Star" D-NET network to avoid the use of the Echo function. This is made easier by the fact that the audio output through the BNC connectors on a DigiCart/II Plus is compatible with standard 75Ω video routers and distribution amplifiers.

Alternately, use the following procedure for recording the digital output of a DigiCart/II Plus that has both file receiver and receiver echo enabled:

1. Press pause on the source DigiCart/II Plus.
2. Press play on the source DigiCart/II Plus.
3. Begin digital recording on the target machine.
4. Release pause on the source DigiCart/II Plus.

SELECTING THE I/O CONNECTOR

The Receiver Input menu item enables you to select either the BNC or XLR digital I/O connectors for transmitting and receiving files.

To select the I/O connector on your DigiCart/II Plus:

1. Press the D-NET XFER Button. Rotate the Select Control until the display shows either:

RECEIVER INPUT

BNC

or

RECEIVER INPUT

XLR-3

2. If desired, use the Left and Right POSITION Buttons select the alternate menu item. Confirm your choice by pressing the ENTER/YES Button.

NOTE: A BNC Male/RCA Female adapter will allow you to connect to your DigiCart/II Plus with a male RCA connector.

MAKING A FILE TRANSFER

To receive a transfer your DigiCart/II Plus:

- Must be connected to the source DigiCart/II Plus.
- Must be turned on.
- Must be enabled to receive file transfers.
- Must not be playing or recording.
- If your DigiCart/II Plus has a Receiver name programmed, the transmission must be for that Name or a wildcard that matches it.

Before beginning, you must decide if you want to transfer a Cut, a Directory or an entire Drive. However, if you have begun transfer setup, you may use the Select control to choose a higher layer transfer without having to begin again. You could, for example, begin the setup for transferring a single Cut and choose instead to transfer the entire Directory or Drive in which the Cut resides.

1. To initiate the transfer of a single Cut, navigate to it on the source machine using the Left and Right POSITION Buttons and the Select Control. (See Chapter One - Navigation)

2. Press the D-NET XFER Button and the display will show:

```
TRANSFER CUT

PRESS ENTER/CANCEL
```

If you choose to transfer the Directory in which the cut resides, rotate the Select Control clockwise and the display will show:

```
TRANSFER DIRECTORY

PRESS ENTER/CANCEL
```

If you choose to transfer the Drive in which the Directory resides, rotate the Select Control clockwise and the display will show:

```
TRANSFER DRIVE

PRESS ENTER/CANCEL
```

3. Press the ENTER/YES Button to confirm your choice. If no Destination has been previously assigned and used, the display will show:

```
DESTINATION  NAME

(NONE  SPECIFIED)
```

4. To assign a new Destination name, press the ENTER/YES Button again. (See RECEIVER NAMES AND DESTINATION NAMES earlier in this chapter) The display will show:

```
▒

NEW DESTINATION  NAME
```

5. Using the Select Control and the Left and Right POSITION Buttons, enter the new destination name. When you have spelled out the new destination name, press the Right

POSITION ARROW Button until the cursor is to the right of the last character in the new destination name. Press the ENTER/YES Button. The display will show:

DESTINATION NAME

(YOUR NEW DESTINATION NAME)

6. Rotate the Select Control clockwise. The display will show either:

DESTINATION LOCATION

(THE LOCATION OF THE CUT IN THE SOURCE MACHINE)

or

DESTINATION LOCATION

MAIL BOX

7. If desired, using the Select Control and the Left and Right POSITION Buttons, enter a new location name or choose the Mail Box. (See "MAIL BOX AND DESTINATION LOCATION TRANSFERS" earlier in this chapter) Confirm your choice by pressing the ENTER/YES Button. The display will show:

DESTINATION LOCATION

(YOUR DESTINATION LOCATION)

Rotate the Select Control clockwise until the Display shows:

BEGIN CUT XFER

PRESS ENTER / CANCEL

8. When ready, press the ENTER/YES Button. The display will show:

PREPARING TO SEND

STOP / CANCEL TO ABORT

NOTE: A transfer can be canceled easily by pressing either the STOP or CANCEL/NO Buttons. You'll be prompted to confirm before the transfer is aborted.

9. During the transfer the display will show:

```
FILE 1 OF 1

XX % COMPLETED
```

The display will update the completion percentage of the Transfer as it progresses. When transferring Drives or Directories, the file number within the group updates as each Transfer is completed.

10. When the transfer is complete, the display will show:

```
TRANSFER  COMPLETE

PRESS ENTER / CANCEL
```

NOTE: D-NET TRANSFERS ARE ONE WAY ONLY. THERE IS NO COMMUNICATION FROM THE RECEIVER DIGICART/II PLUS TO THE SOURCE DIGICART/II PLUS.

TO CONFIRM TRANSFERS, YOU WILL NEED TO GO TO THE RECEIVER DIGICART/II PLUS. THE RECEIVER STATUS DISPLAY REMAINS UNTIL A BUTTON IS PRESSED.

SOURCE DISPLAY DURING INCOMPLETE TRANSFER

- After a brief error message the display changes to:

```
TRANSFER INCOMPLETE

PRESS ENTER / CANCEL
```

- After you press ENTER/YES or CANCEL/NO the display shows briefly:

```
FILES SENT: XXX

PLEASE WAIT
```

- This signifies the number of files transferred without errors.
- If any files could not be sent, the display will show:

```
FILES SENT: XXX

FILES NOT SENT: XXX
```

This signifies the number of files transferred without errors and the number of files not sent due to errors. Errors in a transmitting unit are extremely rare and indicate a hardware problem in the unit itself not in the D-NET connections or in the Receiving unit.

SOURCE DISPLAY DURING ABORTED TRANSFER

- If you press the CANCEL/NO OR STOP Buttons on the source DigiCart/II Plus during a transfer, the transfer will proceed with the display showing:

```
QUIT TRANSFER?

PRESS ENTER / CANCEL
```

- If you press the CANCEL/NO Button, the display will revert to normal and the transfer will continue.
- If you press the ENTER/YES Button, the transfer is aborted and the display briefly shows:

```
TRANSFER ERROR

CANCELED BY USER
```

followed by:

```
TRANSFER INCOMPLETE

PRESS ENTER / CANCEL
```

RECEIVER DISPLAY DURING TRANSFER

- If the Receiver DigiCart/II Plus is idle and the Receiver Name matches the Destination Name on the Source DigiCart/II Plus, when a file transfer begins, the display shows:

```
FILE 1 OF 1

00% COMPLETED
```

- This indicates the file number and total number of files and the percent of the transfer completed for that file.

- When the transfer completes without errors, for a few seconds the display shows:

TRANSFER COMPLETE

NO ERRORS

- Then the display shows:

GOOD FILES: XX

BAD FILES: XX

- This indicates the number of files received without errors and the number of files discarded due to errors.

RECEIVER DISPLAY AFTER A FILE IS RECEIVED WITH ERRORS

- If any file is received with errors, after the brief display of the message, the display will show:

GOOD FILES: XX

BAD FILES: XX

- This indicates the number of files received without errors and the number of files discarded due to errors.

RECEIVER DISPLAY DURING ERROR OCCURRENCE

- When an error occurs for a received file, the cause of the error is displayed briefly and the percent complete display changes briefly to:

SKIPPING FILE

- When the transfer is complete, the display will briefly show:

TRANSFER INCOMPLETE

ERRORS OCCURRED

- Then the display will show:

GOOD FILES: XX

BAD FILES: XX

- This indicates the number of files received without errors and the number of files discarded due to errors.

Errors in the Receiver can be due to:

- A faulty D-NET connection.
- Excessive Disk fragmentation causing space allocation time to exceed the time allowed.
- Hardware failure in the Receiving unit.

Errors caused by the transmitting unit will usually be shown on the display of the transmitting unit.

D-NET IMPLEMENTATION ON INSTANT REPLAY AND SHORT CUT

Please refer to your Instant Replay or Shortcut manuals for complete information on the implementation of D-NET on these products.

IDLE STATE ERROR MESSAGES

LOCATION	MESSAGE	MEANING
SOURCE	COULD NOT OPEN FILE	FILE TO SEND COULD NOT BE OPENED
SOURCE	FILE IS EMPTY	FILE TO SEND IS EMPTY
SOURCE	NO FILES TO SEND	DRIVE TO SEND IS EMPTY
SOURCE	PART OF FILE MISSING	FILE IS SHORTER THAN EXPECTED
EITHER	DISK ERROR	ERROR READING / WRITING THE FILE TO BE SENT / RECEIVED
EITHER	TOO MANY ERRORS	20 DISK OR FILE ERRORS OCCURRED
EITHER	CANCELED BY USER	USER ABORTED TRANSFER BY PRESSING CANCEL or STOP
RECEIVER	TIMED OUT	DATA WAS NOT RECEIVED FOR 10 SECONDS
RECEIVER	MAIL BOX FULL	INDEX 999 IN THE MAIL BOX IS IN USE
RECEIVER	OUT OF DISK SPACE	DRIVE DOES NOT HAVE ENOUGH SPACE TO SAVE THE FILE
RECEIVER	DATA OVERRUN	DRIVE CANNOT ALLOCATE SPACE IN TIME DUE TO FRAGMENTATION

INDEX

⚠ READ ME ⚠

THE DIGICART II PLUS SCSI INTERFACE IS A CENTRONICS® 50 PIN CONNECTOR AND MAY HAVE TO BE ADAPTED TO INTERFACE WITH THE 25 PIN "D" CONNECTOR FOUND ON SOME SCSI DEVICES.

THE 25 PIN FEMALE "D" CONNECTOR ON THE REAR PANEL IS **NOT** A SCSI INTERFACE.
IT IS FOR REMOTE CONTROL ONLY!

CONNECTING A SCSI DEVICE TO THE REMOTE CONTROL CONNECTOR WILL SEVERELY DAMAGE THE SCSI DEVICE.